GB107

GB108

Owner's Manual

Buzzaround Lite™

Golden Technologies - 401 Bridge Street - Old Forge, PA 18518 - Tel: 800-624-6374 - Fax: 800-628-5165 - www.goldentech.com

LIT-107-108-OM_11.15.2022

Thank you for purchasing your Buzzaround Lite™ Scooter. We are honored you have chosen Golden Technologies for your mobility needs.

Buzzaround Lite™
Model: GB107, GB108

Standard Packing List:

1 Owner's Manual
1 Battery Pack
1 Front Basket
1 Seat with Armrest
1 Safety Flag
2 Keys
Battery Charger
Seat Post Hardware

DISCLAIMER

We ask that you read this manual completely before operating your new Buzzaround Lite™. Golden Technologies, Inc. is not and cannot be held responsible for any damage or injury incurred due to improper or unsafe use of the Golden Buzzaround Lite™ scooter. Golden Technologies, Inc. specifically disclaims responsibility for any bodily injury or property damage that may occur during any use that does not comply with applicable federal, state, or local laws or ordinances.

Intended Use: The intended use of this device is to provide mobility to persons limited to a seated position that are capable of operating an electric scooter.

CONTENTS

I. INTRODUCTION.....4
Features and Benefits.....5
Accessories for the Buzzaround Lite™ Scooter.....6

II. SAFETY.....7-11

III. EMI/RFI.....12

IV. YOUR GOLDEN Buzzaround Lite™.....13
Specifications.....14

V. OPERATION.....15-19
Control Panel.....15-16
Control Options.....16
Seating.....17-18
Freewheel Mode.....19

VI. RIDING YOUR Buzzaround Lite™ Scooter.....20-23
Mounting.....20
Basic Driving.....21
Steering in Tight Spots.....22-23

VII. DISASSEMBLY.....24-25

VIII. ASSEMBLY.....26-29

IX. TRANSPORTING YOUR Buzzaround Lite™.....30

X. CARE AND MAINTENANCE.....31-36
Routine Maintenance.....31
Cleaning Your Buzzaround Lite™ Scooter.....31
Batteries and Charging.....32
If Your Buzzaround Lite™ Does Not Operate.....33
Diagnostics.....34-36

XI. WARRANTY.....37-38
Warranty/Registration Card.....39

I. INTRODUCTION

Congratulations on the purchase of your new Buzzaround Lite™ scooter. The Buzzaround Lite™ combines cutting edge technology with attractive designs that are also highly functional in today's world. We at Golden Technologies, Inc. know that you have chosen a scooter that will give you years of dependable operation and also will enhance the quality of your life by providing you with the mobility to experience an active daily lifestyle.

Even though your new Buzzaround Lite™ is both user-friendly and designed for maximum maneuverability in even the tightest spaces, we ask that you please read, understand and follow all of the instructions and suggestions in this manual before you operate your scooter for the first time. The safe use of your new scooter is very important to us.

If you feel that you do not understand the instructions and suggestions presented in this owner's manual, or if, for any reason, you do not feel capable of performing the activities necessary to assemble, disassemble, operate, or maintain your Buzzaround Lite™, please contact your local Golden Technologies, Inc. provider or call Golden Technologies, Inc. Technical Support Services at (800) 624-6374.

Golden Technologies, Inc. cannot be held responsible for personal injury or property damage resulting from the unsafe or the improper use of any of our personal mobility products. Also, Golden Technologies, Inc. cannot be held responsible for personal injury or property damage resulting from attempts to follow instructions, suggestions, and guidelines presented in this owner's manual.

Our Research and Development Department, our Quality Control Department, and our Engineering Department have used the latest product specifications and the latest product design information to manufacture your Buzzaround Lite™. Golden Technologies, Inc. reserves the right to implement changes into our product lines when those changes become desirable or necessary. If changes are implemented into our product line, there may be minor differences between the product you purchased and the illustrations and instructions in this owner's manual.

Please fill out and mail the enclosed warranty registration card. Registration is also available @ www.goldentech.com. We at Golden Technologies, Inc. would appreciate hearing about the dependability of your Buzzaround Lite™ and about the convenience of mobility it has provided for you. We would also appreciate hearing about the service you received from your local Golden Technologies, Inc. provider or representative.

Golden Technologies, Inc.
401 Bridge Street
Old Forge, PA 18518

Phone: (570) 451-7477
Fax: (570) 451-7494
Toll free: (800) 624-6374

For more information about our products and services or to send us your comments, please visit our website at www.goldentech.com

I. INTRODUCTION

FEATURES AND BENEFITS

Your Buzzaround Lite™ scooter has been designed with your comfort in mind. It has also been designed to be a safe method of transportation when safety and operating instructions are followed. Please review the features and benefits of certain components of the Buzzaround Lite™ scooter below.

Tiller handlebar: Offers rubber coated hand rests for comfort and dual throttle control levers for easy right or left hand use.

Control Panel:
Easy to read display features from top to bottom: the LED battery gauge; oversized speed control knob; key switch to turn the unit on and off; and the horn button.

Basket:
The Buzzaround Lite comes standard with a removable front storage basket.

Tiller:
Easy to use tiller offers multiple adjustments to find your most comfortable driving position. The Tiller Adjustment Knob is located at the bottom of the tiller on the right side.

Adjustable Armrests:
Your Buzzaround Lite scooter features width and angle adjustable armrests to find the most comfortable position as well as to make transfers easier.

Seat Swivel:
A standard feature, the seat can swivel to the left or right for easy transfers or to sit more comfortably at a table or desk.

Tiller Lock Knob:
Located at the bottom of the tiller in the front so that you can lock the tiller in place when disassembled.

Easy Access Battery Pack:
Located under the seat, the battery pack has a wireless connector system for easy disassembly and reassembly. The battery pack can be removed and brought indoors for charging with its off board charger.

Figure 1. Buzzaround Lite™ Features (Model: GB107 shown)

I. INTRODUCTION

ACCESSORIES FOR THE BUZZAROUND LITE™ SCOOTER:
A variety of accessories are available for your Golden Buzzaround Lite™ Scooter. Please contact your Authorized Golden Technologies Provider for more information or to order.

- Cane Tube Holder
- Quad Cane Holder
- Walker Holder
- Oxygen Tank Holder
- Cup Holder
- Deluxe Pack N' Go
- Forearm Crutch Holder
- Scooter Cover
- Safety Flag

*Some accessories require a mounting bracket or mounting clips. Please check with your provider to find out if the accessory you would like to order requires a mounting bracket or mounting clips.

Safety Guidelines
The symbols below are used in the owner's manual and/or on the product to identify warnings and to notify you of important safety information. Make sure you read and understand them completely.

WARNING! Indicate(s) a hazardous situation which, if not avoided, could result in death or serious injury. This icon is represented as a black symbol on a yellow triangle with a black border.

MANDATORY! Failure to perform mandatory actions can cause personal in jury and/or equipment damage. This icon is represented as a white symbol on a blue dot with a white border.

PROHIBITED! Indicate(s) an action(s) that should not be performed under any circumstance. Failure to adhere can cause personal injury and/or equipment damage. This icon is represented as a white symbol with a red circle and red slash.

Safety Symbols
The symbols below identify warnings, mandatory actions, and prohibited actions. They can be found in the owner's manual and/or on the product. Make sure you understand all safety labels before operating the product. Do not remove safety labels from the product.

Read and follow the owner's manual!

Explosive conditions exist!

Indoor use only!

Use only AGM or Gel-Cell batteries!

Avoid transmitters!

Hot surface!

Pinch/Crush Hazard!

Do not place into trash!

Electrical hazard!

Corrosive chemicals inside battery!

Recycle

Do not use personal electronic devices!

II. SAFETY

Your Buzzaround Lite™ is a battery-operated personal mobility vehicle. Please exercise caution and consideration when you are operating it. Driving your Buzzaround Lite carefully and thoughtfully will help ensure your personal safety and the safety of other people.

NOTICE Before learning to operate your Buzzaround Lite, have your authorized Golden Technologies, Inc. provider determine if it is advisable for you to practice getting on and off your scooter and operating it in the presence of an attendant.

MANDATORY! Read completely and understand this owner's manual before assembling, operating, transporting, or disassembling your Buzzaround Lite scooter.

BEFORE GETTING ON YOUR BUZZAROUND LITE

• Check to be certain that the power is turned off. See section V. "Operation" in this manual. This will eliminate the possibility of accidentally activating the paddle controls and causing injury to yourself and/or others.

• Check to be certain that your Buzzaround Lite's freewheel lever is in the engaged position. See section V. "Operation" in this manual.

• Flip up the armrest(s).

WARNING When getting on or off your Buzzaround Lite, keep your weight toward the middle of the deck. Putting most or all of your weight on the edge of the deck may cause an unstable condition.

GETTING ON YOUR BUZZAROUND LITE

• Position the seat for safe and easy mounting. Ensure that the seat is facing forward. See Section V. "Operation."

• Return tiller to full upright position if necessary.

• Carefully place one foot on the approximate center of the deck and seat yourself comfortably and securely on the seat.

• Flip down the armrest(s).

GETTING OFF YOUR BUZZAROUND LITE

• Make certain that the power is turned off and the key is removed.

• Return tiller to full upright position

• Flip up the armrest(s).

• Carefully place one foot on the ground, transfer your weight to that leg, and slowly come to a standing position.

• Step away from the scooter.

MAXIMUM WEIGHT

Your Buzzaround Lite has been rated to a maximum weight capacity (operator and anything else being carried onboard) of **300 pounds**. Exceeding the maximum weight rating will void the warranty.

WARNING **Exceeding the maximum weight rating may result in injury to yourself and/or others.**

II. SAFETY

DRIVING ON INCLINES

• For maximum stability, lean forward in your Buzzaround Lite's seat while proceeding up ramps, inclines, curbs, or any low rise. See figure 2.
• Drive with caution when attempting to negotiate any incline, even handicap access ramps.
• **Always** climb or descend an incline by driving straight up or straight down the face of the slope. See figure 2.
• **Do not** traverse or drive across the face of an incline in any direction. See figure 3.
• **Do not** attempt to negotiate an incline that is covered with snow, ice, salt, cut or wet grass, leaves, or any other potentially hazardous material.
• **Do not** drive your scooter in reverse down an incline.
• Try to keep your Buzzaround Lite moving when climbing an incline. If you do come to a stop, restart and accelerate slowly and carefully.
• **Do not** try to descend or climb a slope whose gradient is greater than recommended.

***Buzzaround Lite maximum recommended incline is 6°.**

Figure 2. Going Up an Incline

Figure 3. Traversing an Incline

WARNING **If, while you are driving down a slope, your scooter starts to move faster than you feel is safe, release the throttle control lever and allow your Buzzaround Lite to come to a stop. When you feel that you again have control of your scooter, push the throttle control lever forward and continue safely down the remainder of the slope.**

DRIVING DOWN A DECLINE

• Lower speed setting.
• Whenever it is safely possible, drive forward down any ramp, low rise, or incline.

Golden Technologies, Inc. does not recommend that you drive your scooter in reverse down any incline, ramp, curb, or low rise. Backing down any slope may create a very hazardous situation. If it is necessary to back down a slope follow one of two procedures on page 9.

II. SAFETY

CAUTION When using either of the following procedures to back down a slope, Golden Technologies, Inc. strongly advises that you have the assistance of another person.

Procedure 1 - Under Power
1. Set the key switch to the "Off" position. See section V. "Operation."
2. Turn the speed control dial fully counterclockwise to its slowest setting.
3. **Dismount your Buzzaround Lite™.**
4. Set the key switch to the "On" position. See section V. "Operation."
5. While standing alongside your scooter, carefully operate the controls at the lowest speed setting. See section V. "Operation."
6. Slowly and carefully back your scooter down the incline.
7. Carefully remount your Buzzaround Lite and resume normal operation.

WARNING **When your scooter is in freewheel mode, the park brake is released. If the batteries are dead, the motor braking system will not work. The weight of the scooter on a slope may cause you to lose control of the scooter. If you do not feel capable of manually controlling your scooter down the slope, request assistance or do not attempt to use this procedure.**

Procedure 2 - Emergency (No Power)
1. Set the key switch to the "Off" position. See section V. "Operation."
2. **Dismount your Buzzaround Lite™.**
3. Set the freewheel lever to "Disengaged."
4. While standing alongside the scooter, carefully manually maneuver it down the slope.
5. When you have reached a level surface at the bottom of the slope, position the freewheel lever in the engaged position. See section V. "Operation."
6. Carefully remount your Buzzaround Lite, and set the key switch to the "On" position to restore power.

Motor Braking System
Your scooter is equipped with a system that uses the motor to aid in braking. This motor brake system is designed to work when the key is in either the on position or the off position.

When the key switch is in the on position, the freewheel is in the engaged position, and the scooter is under power, the motor will help slow down the scooter as soon as you take your hand off of the throttle lever.

When the key switch is in the off position and the freewheel lever is in the disengaged position, the motor brake system will keep you from pushing the scooter too fast (i.e. down a slope).

You may notice this when pushing the scooter. The scooter will move freely until you reach a certain speed. You will then encounter some resistance as the motor brake system is activated.

II. SAFETY

MEDICATION

Always check with your physician to determine if any of the medications you are taking may affect your judgment and/or your ability to operate your Buzzaround Lite. Also check with your physician concerning your physical ability to operate a scooter.

WARNING **Do not connect or allow anyone except an authorized Golden Technologies, Inc. provider to connect any electrical or mechanical device to your Buzzaround Lite. Unauthorized accessories will void the warranty and may cause injury.**

NOTICE Please remember that while on your Golden Buzzaround Lite, you are a motorized pedestrian. You must observe and obey all pedestrian rules and regulations for the locale in which you are riding.

Please use your Buzzaround Lite™ scooter often and allow it to expand the horizons of your daily life. The more mobility your Golden Buzzaround Lite brings to you, the happier you will be, and the more satisfied we at Golden Technologies, Inc. will be! But as with all things, especially motor operated vehicles, observing a few rules and safety considerations will help ensure safe scooter operation. So please follow the rules below.

RULES FOR USE AND OTHER SAFETY CONSIDERATIONS

WARNING **Read completely and understand this owner's manual before assembling, operating, transporting, or disassembling your Buzzaround Lite.**

- **Always** operate your Buzzaround Lite with thought, care, and safety.
- **Do not** attempt to use your Buzzaround Lite on an escalator. Always use an elevator.
- **Do not** carry passengers under any circumstances.
- **Do not** mount or dismount your Buzzaround Lite unless the brake is engaged.
- **Always** make sure that the key switch is set to "Off" before mounting or dismounting your scooter.
- **Do not** back your Buzzaround Lite down an incline or across an uneven surface while on the scooter.
- **Do not** turn your scooter suddenly at full speed.
- **Always** make sure the seat is locked in the forward facing position before operating your Buzzaround Lite.
- **Always** come to a full stop before changing direction from forward to reverse or from reverse to forward.
- **Do not** operate your Buzzaround Lite where you could not safely or legally walk.
- **Do not** climb ramps or curbs that exceed your scooter's capacity.
- **Always** approach curbs and inclines straight on.
- **Always** be aware of and careful near mechanical pinch points especially when assembling and disassembling your scooter.
- **Never** sit on your Buzzaround Lite when it is being transported.
- **Always** fasten down your Buzzaround Lite securely with an approved tie-down system while transporting your scooter.
- **Never** operate your scooter if it is not functioning properly.

II. SAFETY

RULES FOR USE AND OTHER SAFETY CONSIDERATIONS - continued

WARNING

- **Always** use caution when driving on soft or uneven surfaces such as grass or gravel. Also use caution on decks where there is no railing.
- **Never** drive on the roadway, except when you must cross the street.
- **Always** cross streets at intersections and use crosswalks or the most direct route, making sure that your path is clear and that you are visible to motor traffic.
- **Never** drive your Buzzaround Lite up or down a step or curb that is higher than the ground clearance listed on the specifications chart (see page 14).
- **Never** back up or down a step or curb.
- **Do not** drive your Buzzaround Lite in icy or salted conditions.
- **Never** operate your Buzzaround Lite while you are under the influence of alcohol.
- **Do not** operate or store your Buzzaround Lite where it will be exposed to rain, snow, mist, and below freezing temperatures.

WARNING **Should you encounter a problem with the operation of your mobility device such as a mechanical or electrical problem <u>immediately stop using the product</u>. Disconnect the batteries then contact the provider from whom you purchased your mobility device for evaluation of the problem and repair if needed.**

III. EMI/RFI

The rapid development of electronics, especially in the area of communications, has saturated our environment with electromagnetic (radio) waves that are emitted by television transmitters, cellular phones, citizen's band radios (CBs), amateur radios (ham radios), wireless computer links, microwave transmitters, paging transmitters, etc. These electromagnetic (EM) waves are invisible and increase in strength the closer one gets to the source of transmission. When these energy waves act upon electrical devices and cause them to malfunction or to function in an erratic or uncontrolled manner, they are referred to as Electromagnetic Interference (EMI) or Radio Frequency Interference (RFI).

EMI/RFI AND YOUR BUZZAROUND LITE™

All electrically powered vehicles, including scooters are susceptible to Electromagnetic Interference/Radio Frequency Interference (EMI/RFI). This interference could result in abnormal, unintended movement of your Golden Buzzaround Lite.

WARNING **Unintended movement or brake release could cause an accident or injury.**

The FDA has determined that each make and model of scooter can resist EMI/RFI to a certain level. The higher the level of resistance, the greater the degree of protection from EMI/RFI—measured in volts per meter (V/m). The FDA has also determined that current technology is capable of providing 20 V/m of resistance to EMI/RFI, which would provide useful protection against common sources of interference. This product has been tested and has passed an immunity level of 20 V/m.

EMI/RFI RECOMMENDATIONS

PROHIBITED! Do not turn on or use hand-held personal electronic communication devices such as cellular phones, walkie-talkies, and CB radios while your scooter is turned on.

- Be aware of any nearby transmitters (radio, television, microwave, etc.) on your intended route and avoid operating your scooter close to any of those transmitters.
- Turn off the power if your Buzzaround Lite is going to be in a stationary position for any length of time.
- Be aware that adding accessories or components or modifying your scooter may make it more susceptible to EMI/RFI.
- If unintended movement or park brake release occurs, turn your scooter off as soon as it is safe to do so.
- Report all incidents of unintended movement or park brake failure to Golden Technologies, Inc. Technical Service at (800) 624-6374.

WARNING **Turn off your scooter as soon as it is safely possible if unintended or uncontrollable motion occurs or if unintended park brake release occurs.**

IV. YOUR GOLDEN Buzzaround Lite™

Figure 4. Your Golden Buzzaround Lite™ (Model GB107 shown)

FOR YOUR RECORDS

Please fill in your Buzzaround Lite's information below. This information will be useful in the event that you ever need to contact Golden Technologies, Inc. concerning your scooter.

Model _____ Serial Number_____

Date of Purchase _____

Provider Name_____

Company_____

Address_____

City _____ State_____ Zip_____

Please remember to fill in and return your warranty registration card in the back of this manual.

IV. YOUR GOLDEN Buzzaround Lite™

Specifications	GB-107	GB-108
Medicare Code	K0800	K0800
Weight Capacity	300 lbs.	300 lbs.
Drive Wheels	Rear	Rear
Maximum Speed	3.61 mph	3.13 mph
Operating Range	5.22 miles	5.42 miles
Ground Clearance Under Deck	2.5 in.	2.5 in.
Turning Radius	39 in.	48.5 in.
Type Batteries	2-12 AH	2-12 AH
Colors	Red	Red
Freewheel Mode	Yes	Yes
Electronic Speed Control	Yes	Yes
Electro-Mechanical Brakes	Yes	Yes
Charger	Off-board	Off-board
Controller	50 Amp	50 Amp
Motor	180W	180W
Length	41.75 in.	44. in.
Width	22.5 in.	23 in.
Height (ground to top seat back)	31.75-33.75 in	31.75-33.75 in
Ground to Top of Seat	19-21 in.	20.5-22.5 in.
Ground to Top of Deck	4 in.	4 in.
Deck to Top of Seat	15-17 in.	16.75-18.75 in.
Number of Seat Height Positions	3	3
Size of Increments	1 in.	1 in.
Front Axle to Rear Axle	33.5 in.	33.5 in.
Weight of Unit: (assembled)	87 lbs.	91.5 lbs.
Front Half	28 lbs.	34 lbs.
Rear Half	20.5 lbs.	20.5 lbs.
Seat with Arms	13.5 lbs.	13.5 lbs.
Batteries (pack with 2-batteries)	17.5 lbs.	17.5 lbs.
Tires:	Solid, low profile	Solid, low profile
Front	8 in.	8 in.
Rear	8 in.	8 in.
Rear Anti-Tip Wheels	2 in.	2 in.
Standard Seat:		
Seat Back Height	12.75 in.	13.5 in.
Width x Depth	15.5" X 14.5"	15.5" X 14.5"
Color	Black Vinyl	Black Vinyl
Warranty:		
Frame	Lifetime Warranty	Lifetime Warranty
Drive Train	2 Year Warranty	2 Year Warranty
Electronics [1]	2 Year Warranty	2 Year Warranty
Batteries	1 Year Warranty	1 Year Warranty

1. Electronics warranty excludes batteries.

Literature is current at the time of printing. Golden Technologies reserves the right to make changes to the product or literature at any time.

V. OPERATION

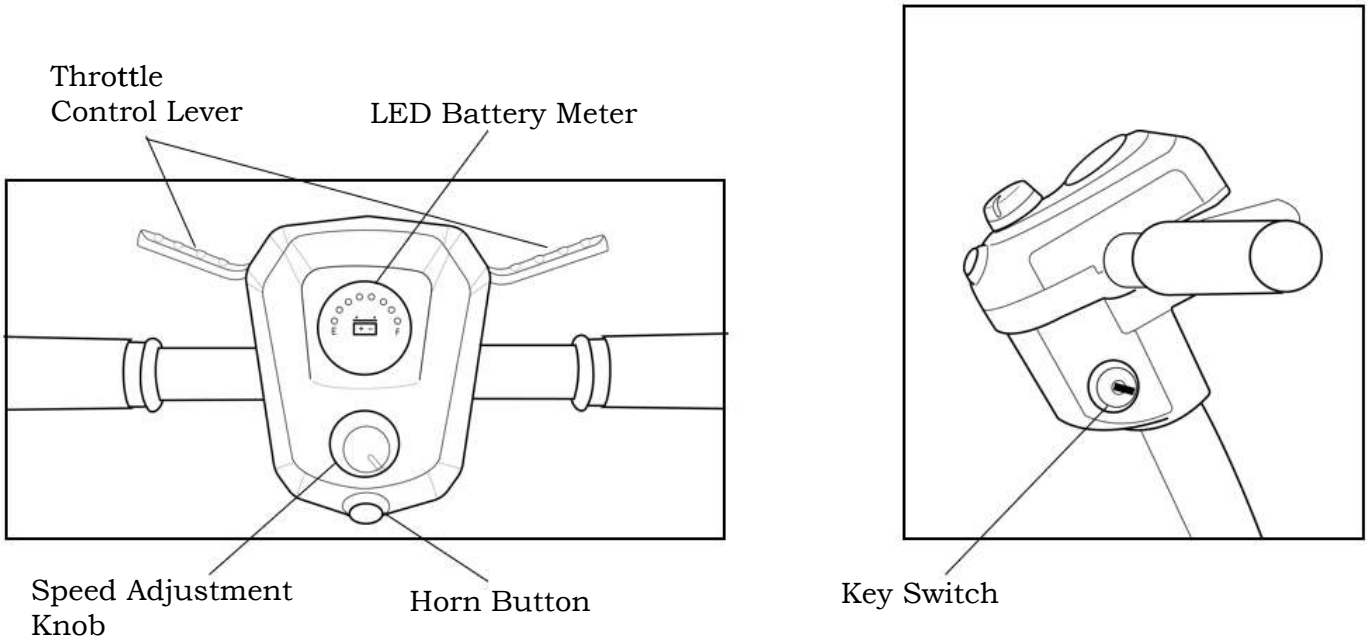

Figure 5. Buzzaround Lite™ Tiller Control Panel

CONTROL PANEL

Speed Adjustment Dial

• The speed adjustment dial allows you to preselect the maximum top speed of your Golden Buzzaround Lite. See figure 5.
• Turn the dial counterclockwise to operate your scooter at the lowest speed level.
• Turn the dial clockwise to increase the operational speed of your scooter.
• We recommend that you select a speed setting at which you feel comfortable, safe, and in control of your Buzzaround Lite.

Key Switch

This switch turns the power on and off to your Buzzaround Lite. See figure 5.
• Insert the key into the key switch.
• Turn the key 90 degrees clockwise to turn on your scooter's power. The LEDs on the battery meter will light up indicating that power is on.
• Turn the key back to the vertical position to turn off your scooter's power.

⚠CAUTION Always make certain that the key is removed from the key switch before getting on or off your Golden Buzzaround Lite or before lowering the tiller completely.

Horn Button

Press this button to sound the horn. See figure 5.

V. OPERATION

DC Battery Voltage Meter
This meter (see figure 5) shows the amount of voltage in your Buzzaround Lite's batteries.
• Green indicates a full charge on the batteries.
• Yellow indicates caution and approximately a one-half charge of the batteries.
• Red indicates that the batteries have less than one-half of a charge remaining.
See section X. "Care and Maintenance" for instruction concerning charging the batteries.

Tiller Throttle Control Lever
The Tiller enables you to use only one hand (either the right or left) to operate both the speed and the direction of the Buzzaround Lite. This self-centering lever system controls your Buzzaround Lite's speed (up to the maximum speed set by the speed adjustment dial and its forward and reverse direction. See figure 5.

To drive forward do the following:
• Use your right hand fingers to pull back on the right side of the throttle control lever.

⚠CAUTION Always bring your Buzzaround Lite to a full stop before changing direction from forward to reverse, or from reverse to forward.

To drive in reverse do the following:
• Use your left hand fingers to pull back on the left side of the throttle control lever.

When the throttle control lever is completely released, it automatically returns to the center "stop" position and engages your scooter's brakes, bringing you to a complete stop. You will hear a "click" when the park brake engages.

Control Options
Golden Technologies, Inc. has made provision for the individual needs and abilities of the operators of the Golden Buzzaround Lite.

Your authorized Golden Technologies, Inc. provider can reverse the throttle control lever controls so that when you pull on the left side of the lever, your scooter will move in the forward direction, and when you pull on the right side of the lever your scooter will move in the reverse direction.

TILLER ADJUSTMENT
The tiller on your Buzzaround Lite scooter employs an adjustment knob to provide you with multiple tiller angle settings. To set the tiller to your liking, follow these directions.
1. Use one hand to grasp a handgrip.
2. Use your other hand to loosen the tiller adjustment knob. See figure 4 on page 13.
3. Position the tiller to a comfortable driving position.
4. Tighten the tiller adjustment knob.

V. OPERATION

SEATING

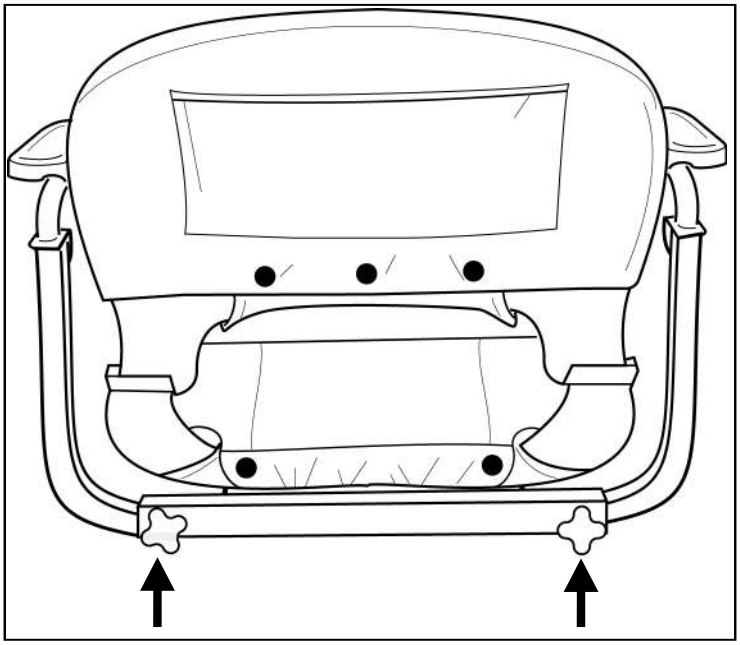

Figure 6. Armrest Width Adjustment

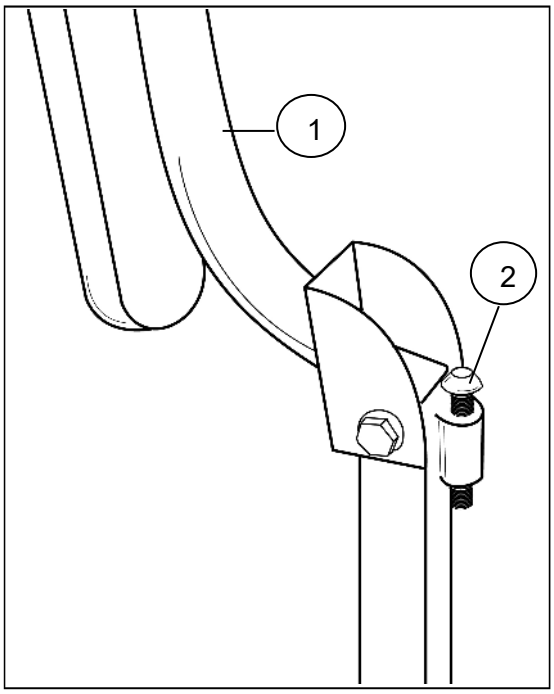

Figure 7. Armrest Angle Adjustment

Armrest Width Adjustment
To adjust the armrest width:
1. Loosen the adjustment knobs at the rear of the seat. See figure 6.
2. Slide the armrests in or out to the desired width.
3. Tighten the adjustment knobs.

WARNING **Be sure adjustments knobs are securely tightened against the inserted armrest tube. Do not overextend the armrest.**

Flip-up Armrests
Pull up on the end of either armrest to flip it up for easy transfer on and off your Golden Buzzaround Lite™. See #1 on figure 7.

Armrest Angle
Loosen the locknut by turning it counter-clockwise.
To increase the armrest angle, turn the armrest angle screw counterclockwise.
To decrease the armrest angle, turn the armrest angle screw clockwise.
See #2 on figure 7.

V. OPERATION

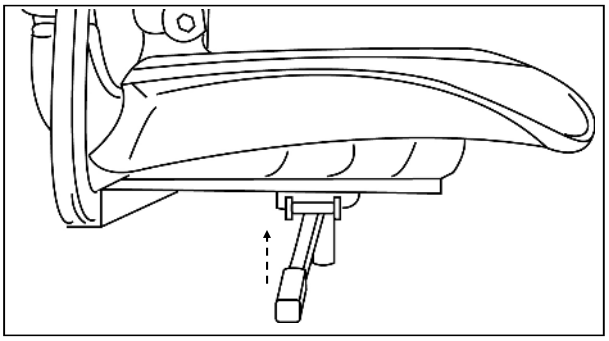

Figure 8: Seat Rotation Adjustment

Seat Rotation Lever

The seat can be rotated through 360° and locked at any 45° position.

1. Pull up on the seat rotation lever and rotate the seat to the desired position. See figure 8.
2. Release the handle to lock the seat at any 45° position.

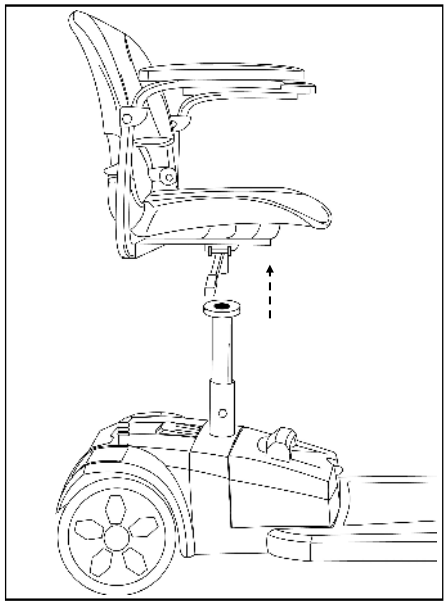

Figure 9

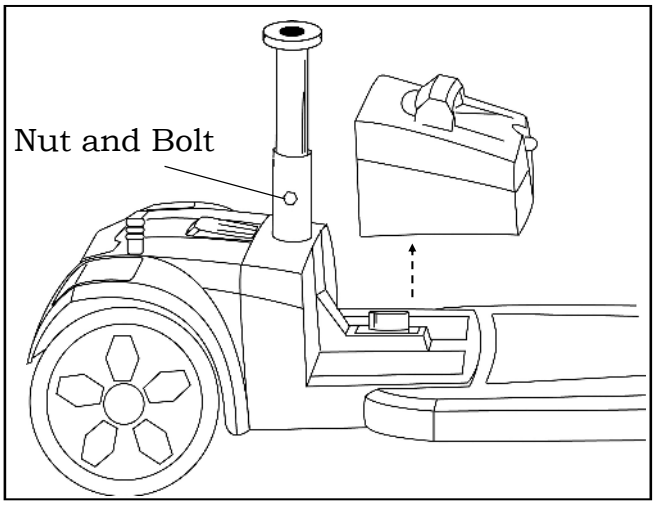

Figure 10

Seat Height Adjustment

To adjust the seat height:

1. Fold the seat back down, grasp the seat on both sides and lift the seat up and off of the seat pedestal. See Figure 9. (*Note: Seat arms can be removed to reduce the seat weight*).
2. Remove the battery box by lifting it up. See figure 10.
3. Loosen and remove the nut and bolt.
4. Position the seat post at the desired height while aligning the holes in the seat post and the seat pedestal.
5. Install and tighten the nut and bolt.
6. Reinstall the battery box.
7. Place the seat back onto the seat post and push down to lock it into place. Move the seat from side to side to make sure it is locked into place.

V. OPERATION

WARNING **Do not sit in or attempt to move your Buzzaround Lite unless the frame and rear carriage are securely engaged. Accidental separation of the frame from the rear carriage may occur and cause injury or damage.**

WARNING **Never sit on your Buzzaround Lite in freewheel mode.**

WARNING **Never disengage the park brake while you are operating your Buzzaround Lite.**

WARNING **Always make certain that your scooter park brake is engaged before inserting the key into the key switch and turning it to the on position.**

FREEWHEEL MODE

Your Buzzaround Lite™ is equipped with a freewheel lever that can set your scooter in or out of freewheel mode.

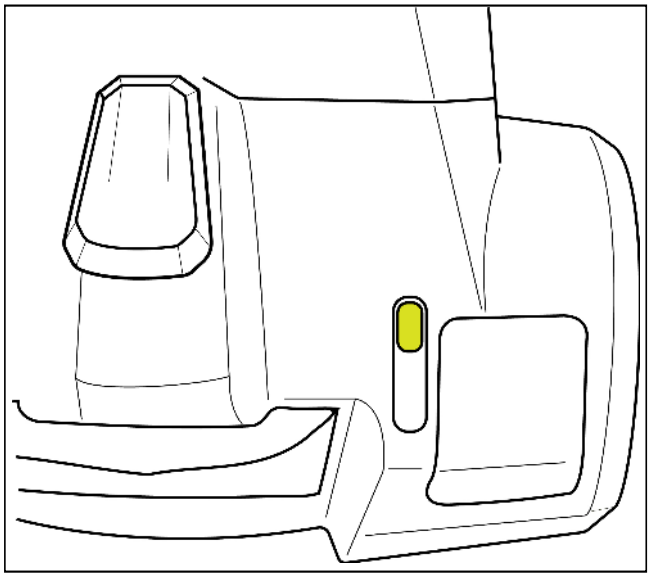

Figure 11: Freewheel Position

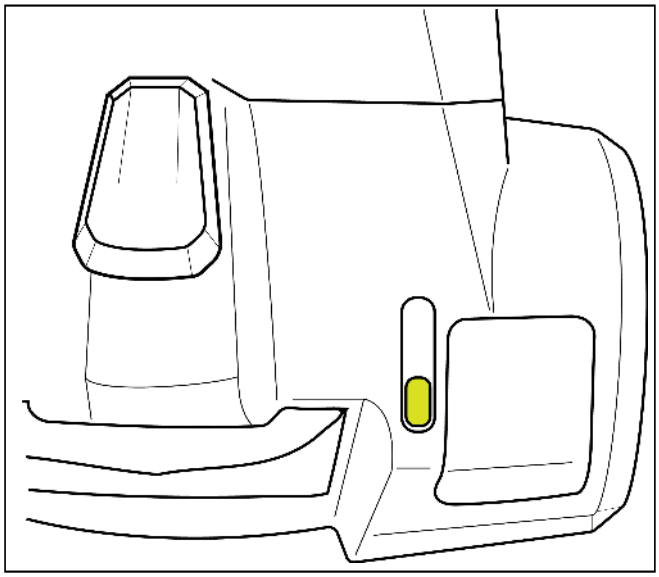

Figure 12: Drive Position

To disengage the park brake and put your scooter in freewheel mode:
Push forward on the freewheel lever towards the letter N (Neutral Position). See figure 11.

To engage the brake and take your scooter out of freewheel mode:
Pull back on the freewheel lever towards the letter D (Drive Position). See figure 12.

NOTICE Pushing the scooter too quickly in freewheel will cause the motor to act as a generator causing the scooter to become difficult to push. Freewheel slowly.

VI. RIDING YOUR Buzzaround Lite™

MOUNTING

CAUTION For your first driving session, make certain that your Buzzaround Lite starts out on a level surface and that you will continue driving on a level surface.

BEFORE GETTING ON YOUR BUZZAROUND LITE™

1. Check to be certain that the key has been removed from the key switch. See section V. "Operation" in this manual. This will eliminate the possibility of accidentally activating the paddle controls and causing injury to yourself and/or others.
2. Check to be certain that your Buzzaround Lite freewheel lever is in the engaged in the drive position. See figure 12.
3. Flip up the armrest(s).

WARNING **When getting on or off your Buzzaround Lite, keep your weight toward the middle of the deck. Putting most or all of your weight on the edge of the deck may cause an unstable condition.**

GETTING ON YOUR BUZZAROUND LITE™

1. Position the seat for safe and easy mounting. Ensure that the seat is facing forward. See figure 9.
2. Return tiller to full upright position if necessary.
3. Carefully place one foot on the approximate center of the deck and seat yourself comfortably and securely on the seat.
4. Flip down the armrest(s).
5. Place the key into the key switch.
6. Rotate the key clockwise to the on position. See figures 13 and 14.

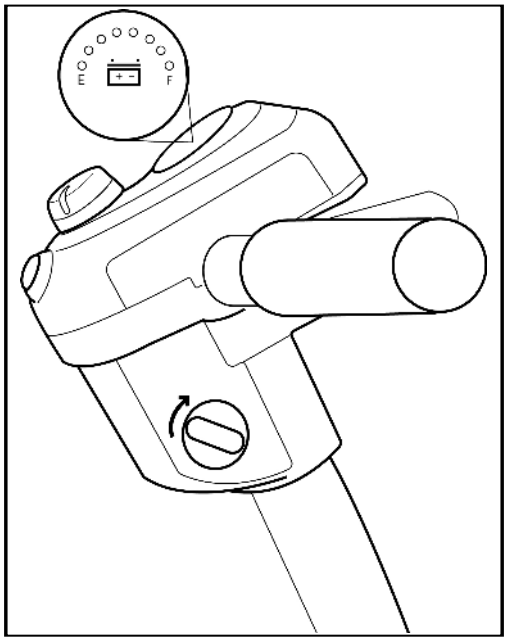

Figure 13. Key Switch (Off)

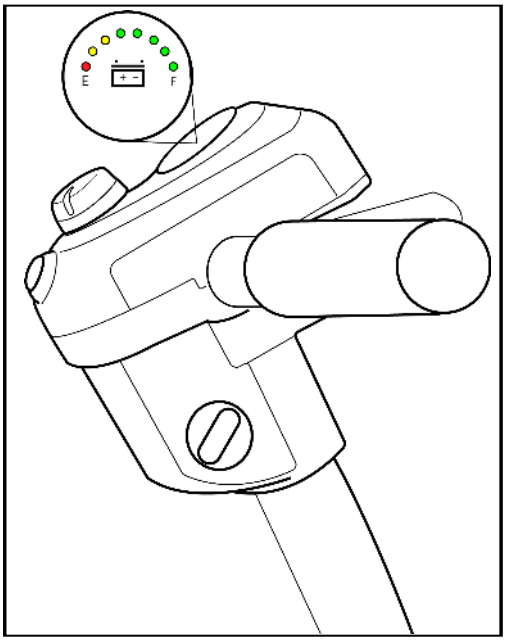

Figure 14. Key Switch (On)

VI. RIDING YOUR Buzzaround Lite™

BASIC DRIVING

1. Make certain that you are seated safely and properly on your Golden Buzzaround Lite.
2. Turn the speed control dial fully counterclockwise to its slowest setting.
3. Insert the key into the key switch—if you have not already done so.
4. Turn the key clockwise to the "On" position. See figure 14 on page 20.
5. Place your hands on the handgrips.

• If you wish to drive forward, pull back on the right side of the throttle control lever (or push the left side of the throttle control lever forward.)
• If you wish to drive in reverse, pull back the left side of the throttle control lever (or push the right side of the throttle control lever forward.)

6. Pull on the throttle control lever to gently accelerate your Buzzaround Lite.
7. Release the throttle control lever to allow your Buzzaround Lite to come gently to a full stop.
8. Practice these two basic functions until you feel that you have control of your scooter.

Steering

Steering your Golden Buzzaround Lite is easy and logical.

1. With both hands on the handgrips of the tiller (see figure 4 on page 13), turn the tiller to the right to travel to the right.
2. With both hands on the handgrips of the tiller (see figure 4 on page 13), turn the tiller to the left to travel to the left.
3. Make certain to maintain sufficient clearance when turning your scooter so that the rear wheels will clear any obstacle.

WARNING **Turning your scooter too sharply at too high a speed may create a situation where one of the rear wheels will leave the ground. This may increase the possibility of tipping the scooter. Avoid this danger at all times by decelerating and steering a wide arc around corners and obstacles.**

VI. RIDING YOUR Buzzaround Lite™

Steering in a Tight Spot
If you must steer in a tight spot, such as entering a doorway or when turning around:
1. Bring your Buzzaround Lite to a full stop.
2. Set speed at the lowest setting.
3. Turn the tiller to the direction in which you wish to drive.
For more information on dealing with obstacles and tight spots, see "Control Through Tight Spots" on the next page.

Steering in Reverse
Backing up your Buzzaround Lite requires attention to what you are doing.
• Use extreme caution when operating your scooter in reverse.
• Plan your route to avoid getting into a difficult situation.
• Make sure your proposed route is clear of people, pets, and obstacles.

1. Use your right fingers to push the throttle control lever or use your left fingers to pull back on the throttle control lever. See figure 5 on page 15.
2. Turn the tiller to the left to drive in reverse to the left.
3. Turn the tiller to the right to drive in reverse to the right.

NOTICE Your Buzzaround Lite's speed in reverse is fifty percent of the speed set at the speed control dial.

WARNING **Prevent injury! Do not drive down an incline in reverse.**

VI. RIDING YOUR Buzzaround Lite™

CONTROL THROUGH TIGHT SPOTS

As you use your Golden Buzzaround Lite to greatly increase your mobility, you will undoubtedly encounter some obstacles that will require practice to negotiate smoothly and safely. Below are some common obstacles that you may meet during the daily use of your scooter. Listed with those obstacles are some driving tips that should help you conquer those obstacles. Learn and follow those tips, and with surprising ease you will soon be in control of your Buzzaround Lite as you maneuver it through doors, up and down ramps, up and over curbs, through grass and gravel, and up and down inclines.

Ramps

When proceeding up any ramp, curb, or incline:

• Lean forward in your seat to move your center of gravity forward for maximum stability and safety.

If the ramp has a switchback, good cornering ability is required.

• Maneuver your Buzzaround Lite so that the front wheels take wide swings around the corners of the ramp.

• Doing this will allow your scooter's back wheels to follow a wide arc around the corner, staying clear of obstacles.

If you must stop your Buzzaround Lite while driving up a ramp:

• Starting up again simply requires that you apply gentle and steady forward power pressure to the throttle control lever.

• Accelerate gently after stopping on any incline.

Driving down a ramp:

• Keep your Buzzaround Lite's speed control dial set fully counterclockwise at the slowest speed setting.

• If you must come to a stop, release the throttle control lever slowly and smoothly.

WARNING **Prevent injury! Do not drive down an incline in reverse.**

Curbs

• Always use caution when negotiating any curb.

• Go up or down a curb head on at a direct 90° angle.

• Approach and negotiate the curb so that both back wheels of your scooter go over the curb at the same time.

• Never negotiate inclines or curbs by traversing them. Doing so may cause the scooter to tip over.

• Go down a curb slowly to avoid a jarring bump. Use as little power as possible.

Grass and Gravel

Your Golden Buzzaround Lite performs admirably on grass, gravel, and hills, but you must follow the operational parameters presented in this manual. Refer to the "Safety" section. If you are unsure about any situation, avoid it. Common sense is your best protection.

• Feel free to use your Golden Buzzaround Lite on lawns or in park areas.

• Avoid long or high grass, which may wrap around your scooter's axles.

• Avoid loose gravel.

VII. DISASSEMBLY

DISASSEMBLY
Your Buzzaround Lite scooter is designed to be disassembled easily in order to be transported. When disassembling your scooter, please be sure to follow these simple instructions.

Remove the Seat
1. Place your scooter on a level surface.

WARNING **Remove the key from the key switch before you begin to disassemble your Buzzaround Lite.**

2. (Optional) Loosen the armrest adjustment knobs and remove the arms from the seat. This will reduce the weight of the seat making it easier to lift.

WARNING **Never pull on the arms or use them as a handle to move the scooter as they could inadvertently pull out of the receiver bar causing injury.**

3. Grip the seat on opposite sides and, with a firm grip; pull the seat straight up. See figure 15.

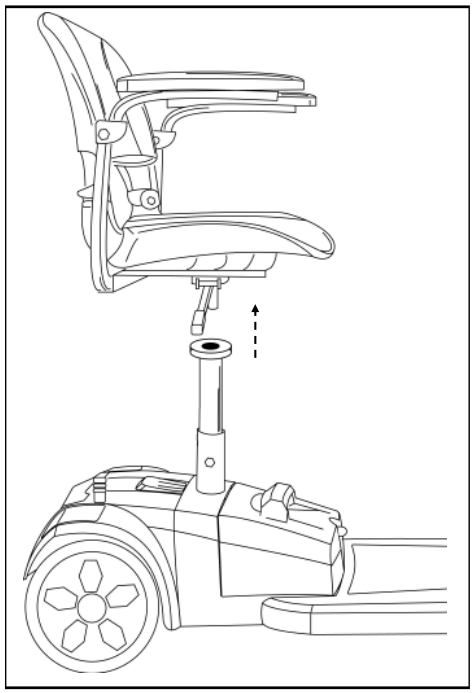

Figure 15. Removing the Seat

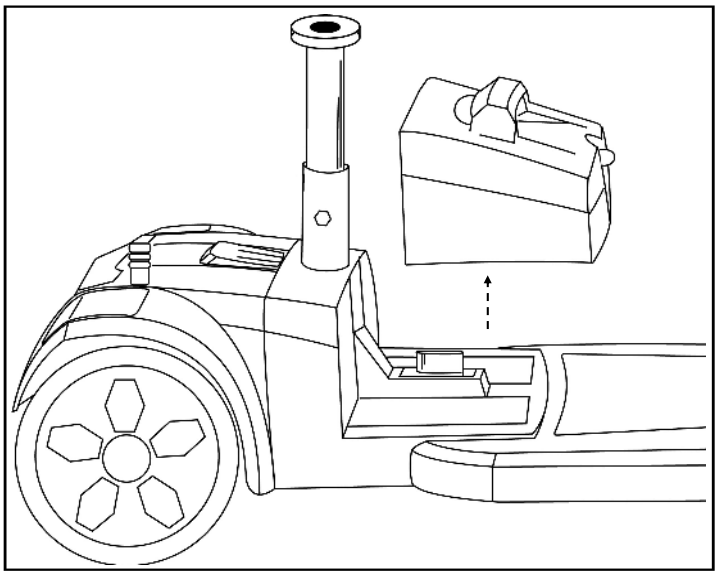

Figure 16. Removing the Battery Pack

Remove the Battery Pack
4. Lift the battery pack off the scooter. See figure 16.

Remove the Front Basket
5. Remove the front basket by pulling up.

VII. DISASSEMBLY

Fold Down and Lock the Tiller

6. Push in and turn the tiller lock clockwise 90 degrees. See #1 on figure 17.
This will lock the front wheel to keep it from turning side to side to help control while carrying.

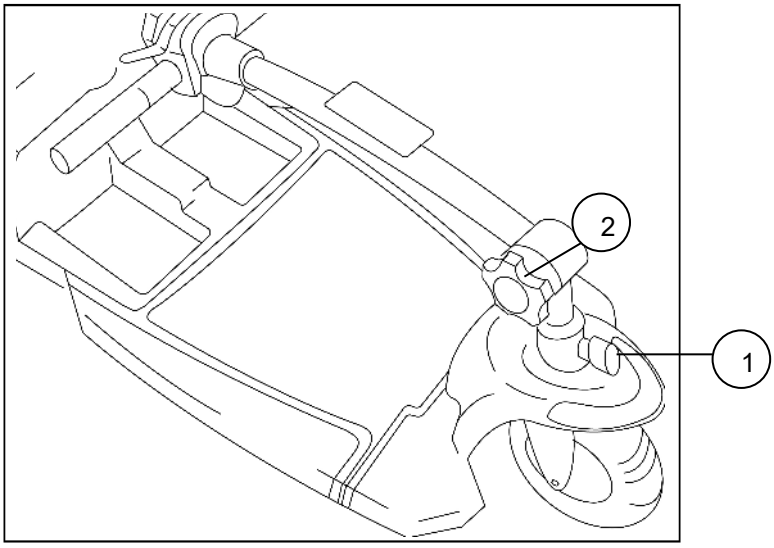

Figure 17. Lowered Tiller

6. Loosen tiller adjustment knob and fold the tiller down flat. See #2 on Figure 17. Then tighten the adjustment knob to secure the tiller in its new position.

Separate the Drivetrain from the Frame

WARNING! Be careful not to pinch your fingers between the frames. This area is a pinch-point and requires your full attention.

7. Pull up on the drivetrain release lever with one hand to unlock the front and rear frame sections. See Figure 18.
8. Pull the front frame up and off of the drivetrain. See figure 18.

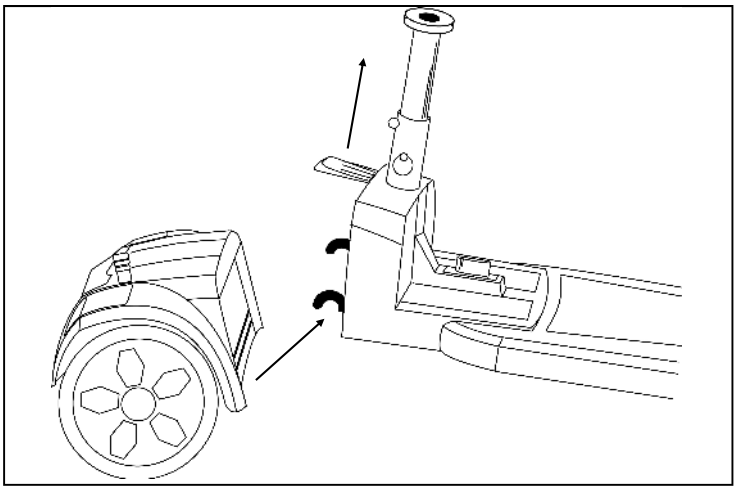

Figure 18. Separating the Drivetrain and Frame

VIII. ASSEMBLY

WARNING! Be aware of any possible pinch-points when connecting the rear frame to the front frame. Please note warning labels at pinch-points during assembly.

WARNING! Pinching and crushing hazard! Increased hazards due to pinching or crushing result due to the component weight (such as batteries) during preparation for transport and maintenance work. Always carry out any work to be done with great care. Always try to get help from a second person, especially when stowing parts for transport.

WARNING! Pinch Point: A pinch point is an area where you **MUST** consider your fingers to be sure they **DO NOT** become pinched between two metal or hard plastic areas. The greatest chance of pinch points becomes possible during the assembly of the Buzzaround Lite scooter.

WARNING **INJURY HAZARD DUE TO IMPROPER ASSEMBLY!**

Ensure that all components in the scooter have been correctly assembled. During assembly, please check that all connecting/locking devices are holding in place.

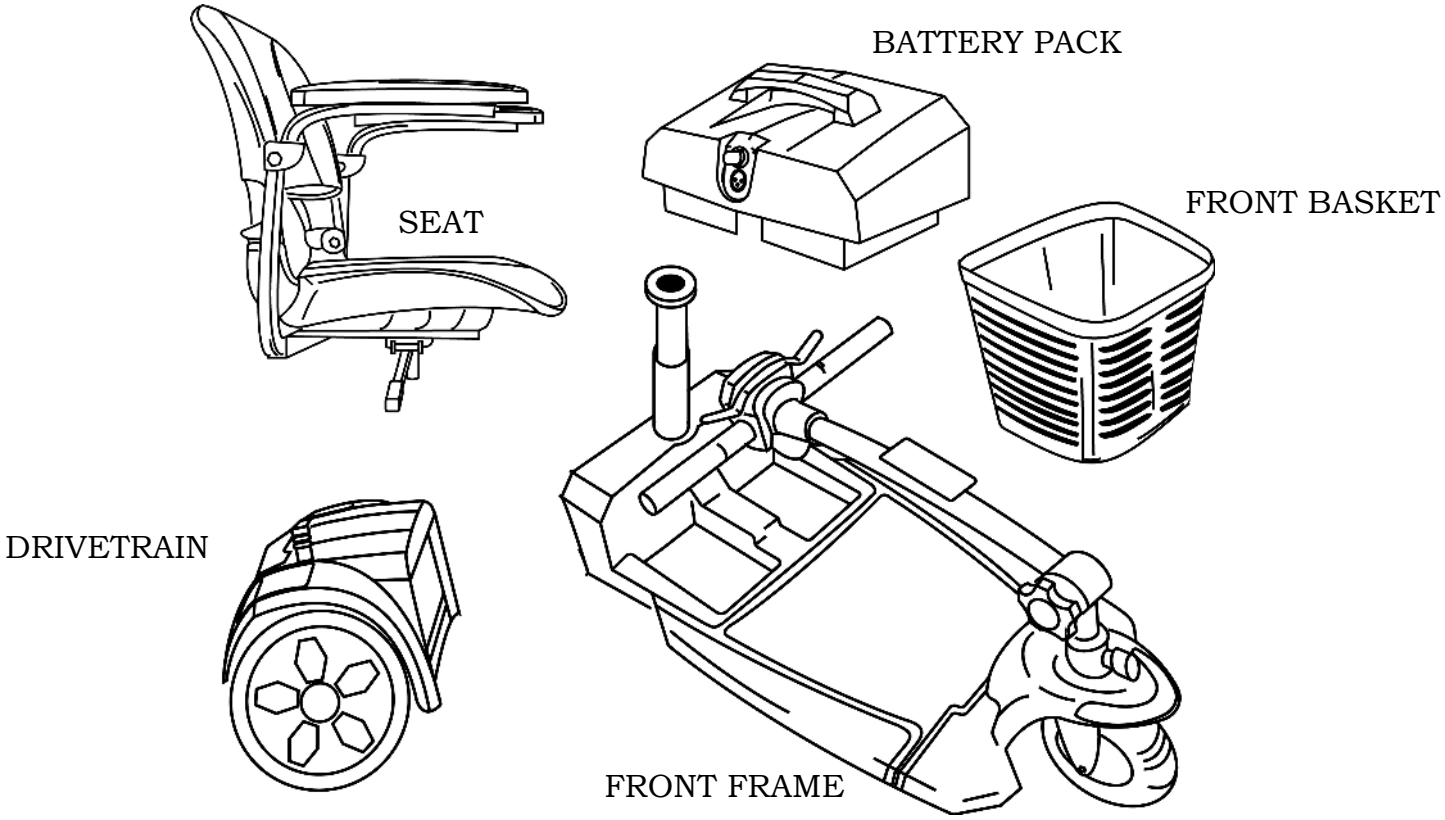

Figure 19. Buzzaround Lite™ Components (Model GB107)

VIII. ASSEMBLY

Reinstall the Drivetrain

1. Line up the frame and the drivetrain. See figure 20.

WARNING! WATCH FINGER PLACEMENT! BE CAREFUL NOT TO PINCH YOUR FINGERS!

2. Lower the frame onto the drivetrain until the drivetrain release lever engages. You should hear an audible click. See figure 21.

Install the Battery Pack

3. Gently lower the battery pack onto the frame. See figure 22.

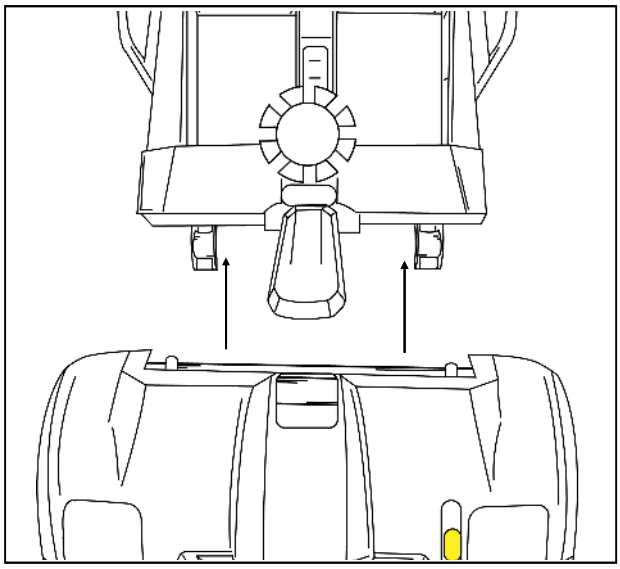

Figure 20. Drivetrain Alignment

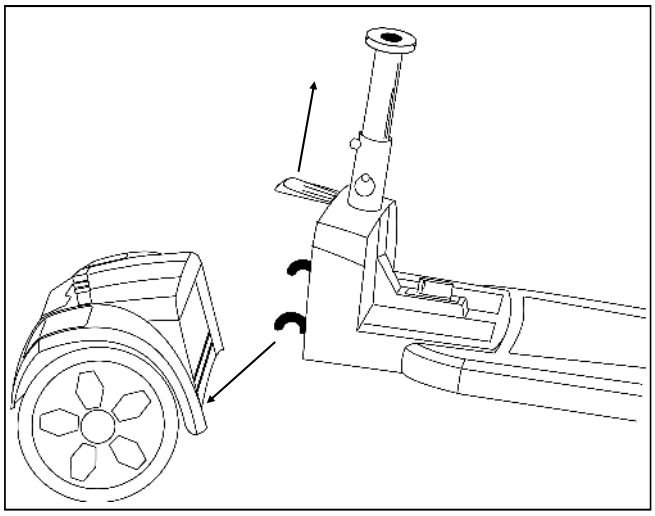

Figure 21. Connecting Frame and Drivetrain

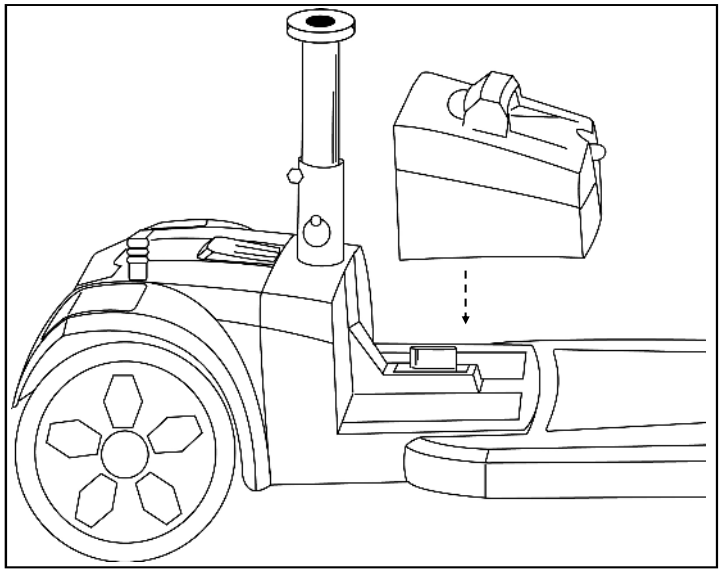

Figure 22. Battery Pack Installation

VIII. ASSEMBLY

Raise the Tiller

4. Loosen the tiller adjustment knob and raise the tiller. See figure 23.
5. Tighten the tiller adjustment knob at the desired position.

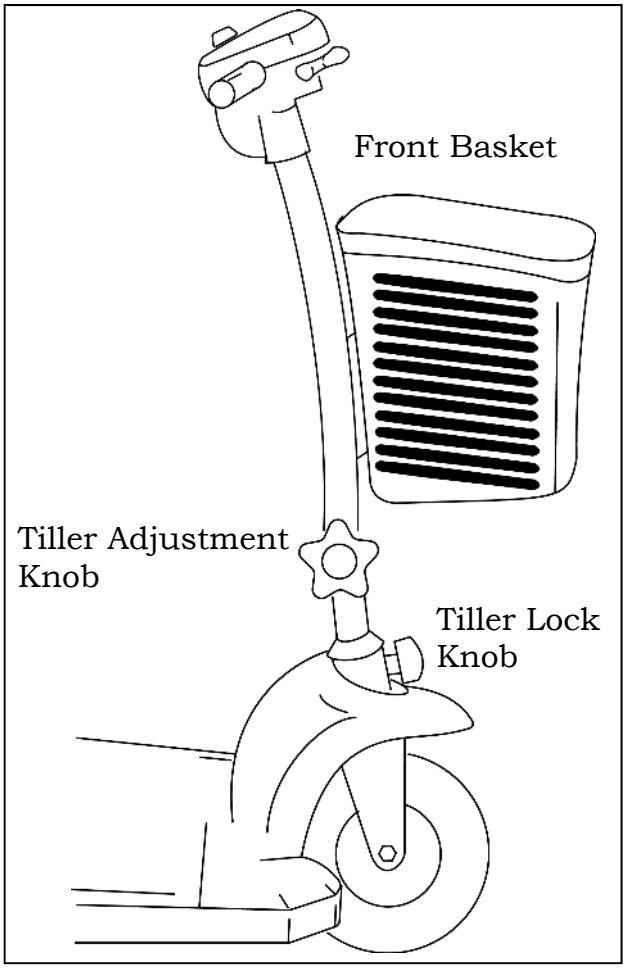

Figure 23. Tiller Raised

WARNING **MAKE SURE YOU TIGHTEN YOUR TILLER ADJUSTMENT KNOB TO BE SURE IT IS SECURED IN THE DESIRED POSITION!**

Install the Front Basket

6. Place the basket onto the tiller bracket and push down to lock it in place. See figure 23.

VIII. ASSEMBLY

Install the Seat

7. Hold the seat on an angle so you can see the seat swivel post underneath.
8. Place the seat swivel post into the seat post as shown in figure 24.
9. Push down on the seat to lock the seat in place. Move the seat from side to side to make sure it is locked in place.

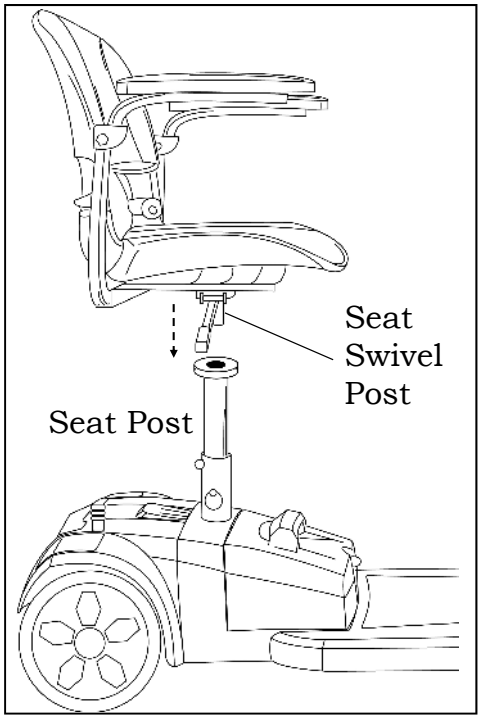

Figure 24. Installing the Seat

WARNING! Pinch Point! Keep hands and clothing clear of the seat swivel post and seat post.

WARNING **Accident hazard due to non-engaged seat! Ensure that the seat is properly engaged by turning the seat slightly left and right.**

Unlock the Tiller

10. Turn the tiller lock knob counterclockwise 90 degrees to the unlocked position. See figure 23 on page 28.

WARNING **IF YOU DON'T UNLOCK YOUR TILLER LOCK KNOB, YOUR TILLER WILL NOT TURN! THIS COULD CAUSE INJURY.**

Accident hazard due to incorrect seat position! Always turn the seat to face forwards and engage it before driving. If the seat is in any other position, the possibility of tipping is increased. Before turning the seat, always ensure that the scooter is on an even and solid surface.

IX. TRANSPORTING YOUR Buzzaround Lite™

Figure 25. Buzzaround Lite™ (Model GB108 shown)

NOTICE All Golden Buzzaround Lite scooters can be equipped with docking devices for loading onto a vehicle by means of a mechanical lift or hoist. Contact your Golden Technologies, Inc. provider for more information concerning docking devices and scooter lift devices.

To Transport Your Buzzaround Lite:

• Disassemble or fold down the seat and tiller (see section VII. "Disassembly") as close as possible to the loading area of the vehicle to be used for transporting your scooter.

• The degree to which you disassemble your Buzzaround Lite or fold the seat and tiller depends on the size and shape of the cargo area of the transporting vehicle.

• Moving blankets or other forms of padding may be used to protect your Buzzaround Lite during transportation.

⚠CAUTION

• **Do not** lift your Buzzaround Lite by its plastic body parts or dash. Breakage of these parts is not covered by the warranty.

• **Do not** use the tires or wheels to lift the rear carriage. The carriage may rotate and cause injury or damage.

WARNING **If your scooter and its components are not properly and securely stowed during transportation, the scooter or the components may move or become airborne and cause injury or damage.**

WARNING **Never sit on your Buzzaround Lite when it is being transported. Secure with an approved tie-down system.**

WARNING **If transporting your scooter on an outside lift, remove seat or make sure the seat is fasten down securely with an approved tie-down system supplied by your lift manufacturer while transporting your scooter. Failure to do so could result in the seat coming loose and becoming airborne. This situation could cause problems for the traffic behind you and possibly result in an injury.**

X. CARE AND MAINTENANCE

ROUTINE MAINTENANCE

Your scooter requires a minimal amount of care and maintenance. If you do not feel confident in your ability to perform the maintenance listed below, you can schedule an inspection and maintenance with your provider.

- ✓ Make sure your batteries are fully charged daily. See "Battery Charging".
- ✓ Regularly inspect your scooter's tires for signs of wear.
- ✓ Regularly inspect all exposed harnessing and connections for wear, damage, and corrosion. Have your provider repair or replace any damaged harness or connector.
- ✓ Periodically check all fasteners for tightness, wear, and corrosion. If any of these are present, turn off the scooter and contact your provider.

WARNING **Be careful of pinch points and sharp metal parts (wear gloves).**

- ✓ Keep all the electrical components (charger, console panel, and electronics) free from moisture. If any of these items do become exposed to moisture, let them dry thoroughly before attempting to operate your scooter again.
- ✓ All bearings are permanently lubricated and sealed. No additional lubrication is required.

CLEANING YOUR Buzzaround Lite™

Tires

Clean the tires with ordinary kitchen-type cleaners and a damp cloth. Do not use solvents on the tires. Solvents can cause the tire material to break down or become too soft.

Body

The body (rear fender shrouds (2), nose piece (1), and the console shroud) of your scooter is formed ABS color through plastic for style and durability. Each Buzzaround Lite comes standard with quick snap color shrouds in Red. Shrouds can be changed simply by gently snapping off the pieces.

NOTICE **Do not use excess water or pressure when cleaning your scooter.**

- **Never** take your scooter through a car wash.
- **Never** use a high pressure hose to wash your scooter.
- Use cool water mixed with a mild soap to remove dirt and oils.
- Dry with a clean soft cloth.
- Buff by hand with a soft cloth.
- **Do not** use a sharp object when removing shroud pieces.
- Clean the body of your scooter with a damp cloth.

Vinyl Seat

Clean with a mild soap or mild detergent and a damp cloth. A vinyl cleaner may also be used.

X. CARE AND MAINTENANCE

IMPORTANT! New batteries **MUST** be fully charged prior to the initial use of your scooter. **Charge new batteries for 12 hours even if the battery gauge already shows a full charge. This is to condition your new batteries for maximum performance.**

WARNING! Corrosive chemicals contained inside the battery.
Explosive battery conditions exist.

WARNING! Charger surface can become HOT.
Electrical hazard!

BATTERIES AND CHARGING

Battery maintenance is the most important part of maintaining your scooter. Keeping the batteries fully charged helps to extend battery life. Use the following guidelines to help keep your batteries in optimum condition.

• For daily use, keep batteries fully charged. We recommend that you plug in the off-board charger after each use and charge 6-8 hours.

"For best results please charge your batteries overnight after every use."

• If you are not going to use the scooter for more than a week, **fully charge** the batteries and then remove the battery pack from the scooter. See figure 16 on page 24.

<u>Charging Guidelines Checklist to Maximize Battery Life</u>

✓ Use only the automatic off-board charger supplied for all routine charging.
✓ Never use an automotive or wet type charger.
✓ Avoid deep discharges and never drain the batteries completely.
✓ Do not leave batteries in a low state of charge for extended periods. Charge a discharged battery as soon as possible.
✓ Fully recharge batteries regularly.
✓ Always store batteries fully charged.
✓ Check stored batteries once a month and recharge as necessary.

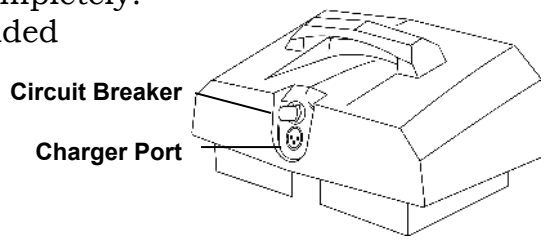

Figure 26. Battery Pack

To Charge the Batteries:

The charger for all Buzzaround Lite models is an off-board charger. To charge the batteries, plug the charger into the charger port on the battery pack or on the side of the console. See figures 26 and 27. When the batteries are fully charged, disconnect the charger power cord from the wall outlet and from the charging socket. **Note: Your scooter will not move while the charger remains connected.**

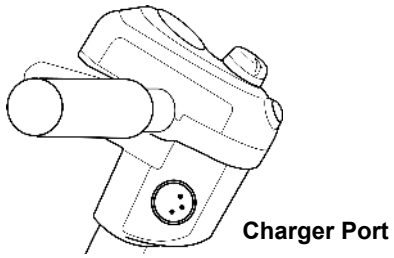

Figure 27. Tiller

Battery Maintenance

MANDATORY! Use only AGM or GEL-cell SLA deep-cycle batteries for operating the Golden Buzzaround Lite scooters.

• These batteries are maintenance free.

• There is no danger of spillage or leakage, so these batteries are safely transportable on aircraft, buses, trains, etc.

• By following the procedures set out in this manual, you can expect extended life from our Golden Buzzaround Lite's batteries.

X. CARE AND MAINTENANCE

IF YOUR Buzzaround Lite™ DOES NOT OPERATE

• Make certain the freewheel lever is set to the engaged position. See figure 12 on page 19.
• Check the main circuit breaker. If necessary, reset the circuit breaker. See figure 26 on page 32.
• Make certain that the speed adjustment dial is at the desired setting.
• Make certain that the key switch is set to the "On" position.

If none of the above procedures solve the problem, contact your authorized Golden Technologies, Inc. provider.

MAIN CIRCUIT BREAKER

The main circuit breaker reset button is located on the battery pack. See figure 26 on page 32.

WARNING! Do not attempt electrical repairs. Consult Golden Technologies, Inc. or your authorized Golden Technologies, Inc. provider. If, for no apparent reason, your Buzzaround Lite stops operating, the main circuit breaker may have tripped.

Possible causes for the main circuit breaker to trip:

• Driving up a long, steep hill.
• Driving over a curb.
• Run-down batteries.
• Exceeding the maximum weight capacity of the scooter.

As you operate your Buzzaround Lite, battery voltages go down and battery current must rise to satisfy the demands of the motor and of other electrical devices operating on your scooter. This can cause a heavy current draw that will trip the main circuit breaker.

Remedy:

• Recharge your Buzzaround Lite's batteries. See "Charger and Batteries" in this section of this manual.
• If the problem continues, have your authorized Golden Technologies, Inc. provider load test the batteries.
• If the batteries are good, the charger may be the problem. Consult your authorized Golden Technologies, Inc. provider.

Resetting the Main Circuit Breaker

1. If the main circuit breaker trips as a result of run-down batteries or because of a temporary overload, reset the circuit breaker:
2. Wait ten minutes or so for the motor control board to return to the normal operating temperature range.
3. Make certain that the key switch is set to the "Off" position.
4. Press in on the main circuit breaker reset button. See figure 26 on page 32.

X. CARE AND MAINTENANCE

NOTICE If the main circuit breaker continues to trip, there is probably an underlying electrical fault that needs attention.

• Contact your authorized Golden Technologies, Inc. provider.
• **Do not** keep resetting the main circuit breaker without correcting the underlying electrical problem.

DIAGNOSTICS

The diagnostics feature of your Golden Buzzaround Lite microprocessor based motor control board functions as follows:

• Any fault condition with the controller or with an associated system will cause the battery meter to flash and the horn to beep.
• The flashing of the meter and beeping of the horn occurs as one flash/beep or a series of flashes/beeps separated by a two-second pause.
• The number of flashes/beeps in each series is referred to as the "Flash/Beep Code."
• The flash/beep code indicates the nature of the condition or fault.

Flash/Beep Codes

1 Flash/Beep

• Indicates that the battery voltage (with the throttle control lever in the neutral position) is below the required operating voltage of the scooter.
• The batteries need to be charged.
• Your Buzzaround Lite will continue to operate at reduced speeds.
• As the voltage drops you will experience a power loss.
Remedy: Charge your Buzzaround Lite's batteries. See "Batteries and Charging" in this section.

2 Flashes/Beeps

• Indicates that the battery voltage is too low for the scooter to operate.
• At this voltage your scooter will cease operation.
• If you have charged the batteries and the condition continues, one or both of the scooter's batteries may be at fault.
• The continuance of this condition after you have charged your Buzzaround Lite's batteries may also indicate a problem with the battery charger.

3 Flashes/Beeps

Consult your authorized Golden Technologies, Inc. provider.

X. CARE AND MAINTENANCE

4 Flashes/Beeps
• Indicates that the motor control board is overloaded and overheated.
• An overload can occur if you have been driving your Buzzaround Lite for an extended period of time up an incline above the recommended 6 degrees.
• An overload can occur if your Buzzaround Lite is carrying a payload that is higher than the recommended weight capacity of 300 pounds.
• Your scooter will not operate until the motor control board cools back to its operational temperature range.
Remedy:
• Turn off your Buzzaround Lite's key switch and allow the scooter to sit for 10 minutes.
• Consult your authorized Golden Technologies, Inc. provider.

5 Flashes/Beeps
• Indicates a brake problem.
• The freewheel lever may be in the disengaged position. See page 19.
• The brake or the brake wiring may be damaged.
• For safety reasons, your scooter was designed to cease operation until the problem is corrected.
Remedy:
• Make certain that the freewheel lever is in the engaged position. See page 19.
• Turn the key switch to the "Off" position to stop the beep code.
• Set the freewheel lever to the "engaged" position.
• Turn the key back to the "On" position.
• If the above remedies do not solve the problem, contact your authorized Golden Technologies, Inc. provider.

6 Flashes/Beeps
• Indicates that the throttle control lever was not in the neutral position when the key switch was turned to the "On" position.
• May indicate that the throttle control lever is out of adjustment.
Remedy:
• Turn the key switch to the "Off position.
• Make certain that the throttle control lever is in the neutral position.
• Turn the key switch to the "On" position.
• If the above procedure does not solve the problem, contact your authorized Golden Technologies, Inc. provider.

X. CARE AND MAINTENANCE

7 Flashes/Beeps
• Indicates a problem with the throttle control lever.
• May also indicate a problem with the potentiometer (speed control.)
• Your scooter will not operate until the problem is resolved.
Remedy:
• Make certain that all electrical connections are firmly and correctly joined.
• If the connections are all firmly joined and the problem is not solved, contact your authorized Golden Technologies, Inc. provider.

8 Flashes/Beeps
• Indicates a motor voltage problem.
• Your scooter will not operate until the problem is corrected.
Remedy: Contact your authorized Golden Technologies, Inc. provider.

9 Flashes/Beeps
• Indicates other internal errors or faults
• Your scooter will not operate until the problem is corrected
Remedy: Contact your authorized Golden Technologies, Inc. provider.

NOTICE FOR YOUR CONVENIENCE, THESE DIAGNOSTIC BEEP CODES ALONG WITH THE SERIAL NUMBER OF YOUR SCOOTER CAN BE FOUND UNDER THE BATTERY BOX. THIS WILL ALLOW YOU TO ACCESS THIS IMPORTANT SERVICE INFORMATION AT ANY TIME. IF POSSIBLE, PLEASE REFER TO THIS INFORMATION BEFORE CONTACTING YOUR AUTHORIZED GOLDEN TECHNOLOGIES, INC. PROVIDER.

XI. WARRANTY

Consumer Limited Warranty
Scooters

Golden Technologies has provided information throughout the owner's manual in regards to proper usage and care of your scooter. Failure to adhere to this information will void the warranty of the scooter, it's parts and the batteries supplied by Golden Technologies.

The following warranty is granted only to the INITIAL Consumer who has purchased our product and commences on the Date of Purchase by the Consumer from an Authorized Golden Technologies' Provider. The Consumer must have a warranty registration card filed with Golden Technologies to receive service.

The warranty covers the following scooter models unless otherwise noted:

- BUZZaround LT: GB107, GB108
- BUZZaround XL Series: GB117D,G117S,GB117H, GB117Z,GB147D,GB147S, GB147H, GB147Z, GB121, GB124
- BUZZaround Extreme: GB118, GB148, GB119,GB149
- LiteRider: GL111, GL141
- All Companion Models: GC240, GC340, GC440
- Avenger: GA541
- Patriot: GR575

Lifetime Limited Warranty:
For the life of the scooter, from the date of purchase from an authorized Golden Technologies' dealer, in the event of defective materials or workmanship, Golden Technologies will repair or replace at our option any of the following structural frame components found to be defective by an authorized Golden Technologies representative:

- Steel Frame
- Frame Welds
- Tiller Frame
- Front Fork
- Seat Post

****The GR575 is warranted for FIVE YEARS***

Two-Year Warranty:
For the period of two years from the date of purchase, in the event of defective materials or workmanship, Golden Technologies will repair or replace at our option with any new or reconditioned components any of the following drive train components found to be defective by an authorized Golden Technologies representative:

- Transaxle
- Motor/Brake Assembly (electrical function only)

Note: An increase in operating noise of the transaxle DOES NOT constitute a defect. With normal wear and tear, operating noise is expected to increase.

For the period of two years from the date of purchase, in the event of defective materials or workmanship, Golden Technologies will repair or replace at our option any of the following electronic assemblies found to be defective by an authorized Golden Technologies representative:

- Electronic Controller
- Battery Charger
- Dash Assembly
- Potentiometer Assembly
- Wire Harness(es)

Note: While charging batteries, it is normal for the battery charger to heat up. Heat coming from the battery charger does not constitute a defect.

One-Year Limited Warranty
For the period of one year from the date of purchase, in the event of defective materials or workmanship, Golden Technologies will replace the **batteries supplied by Golden Technologies** if found to be defective by an authorized Golden Technologies representative.

XI. WARRANTY

Consumer Limited Warranty
Scooters (continued)

One-Year Limited Warranty:
For the period of one year from the date of purchase, in the event of defective materials or workmanship, Golden Technologies will repair or replace at our option any of the following parts found to be defective by an authorized Golden Technologies representative:

- Bearings
- Bushings
- Seat Swivel Mechanism
- Rubber Components (excludes tires)
- Armrests
- Plastic Components (excludes body)

Items not listed are covered at the discretion of Golden Technologies. Any accessories, standard or optional, supplied by Golden Technologies, are covered for a period of one year from the date of purchase with the particular unit.

Warranty Exclusions:
Golden Technologies does not provide warranty on any of the following items which may require replacement due to the normal wear and tear of day to day usage:

- Tires and Tubes
- ABS Plastic Shrouds
- Armrest Pads
- Motor Brushes
- Bulbs/Fuses
- Brake Pads
- Upholstery

This warranty also excludes the following:

- Loss or theft of components (ie: keys, baskets, etc.)
- Damage caused by:
  - Battery fluid spillage or leakage
  - Abuse, misuse, accident or negligence.
  - Improper operation, maintenance or storage.
  - Commercial use or use other than normal.
  - Repairs and/or modifications made to any part without the specific consent of Golden Technologies.
  - Exceeding the specified weight capacity of the unit.
  - Accessories other than those supplied or approved by Golden Technologies.
  - Failure to adhere to the product instructions
  - Acts of Nature, such as lightning strikes, earthquakes, etc……
  - Circumstances beyond the control of Golden Technologies.

- **ANY PARTS ALTERED OR REPAIRED BY UNAUTHORIZED PERSON**.

Warranty Service:
Warranty Service must be performed by an authorized Golden Technologies representative. Golden Technologies reserves the right to replace warranted part(s) with refurbished or new part(s) at our discretion. All labor charges, service calls, transportation costs or any other charge(s) associated with the installation of any warranted part(s) are the responsibility of the consumer. Warranty is for the replacement of the parts only and does not include freight for the replacement parts. Consumers are not to return any item(s) to Golden Technologies without prior written authorization. Any damages incurred while warranted part(s) are in transport are the sole responsibility of the consumer.

There is no other express warranty.

Implied warranties, including those of merchantability and fitness for a particular purpose are excluded. Liabilities for consequential damages are excluded. This warranty gives you specific rights and you may also have other rights which may vary from state to state.

Notes:

Notes:

GOLDEN PRODUCT REGISTRATION

Register Now ***To Lock In Your Warranty*** and Receive Important Product Updates

SAVE TIME - REGISTER ONLINE: WWW.GOLDENTECH.COM

SERIAL NUMBER

Most Lift Chairs Have On Controller Wire or Back Rail of the Metal Frame
Most Scooters & Powerchairs On Seat Post, Under/On Battery, or Under Carpet

PRODUCT MODEL NUMBER

Most Lift Chairs Start with PR (PR401, PR510, etc).
Most Scooters with G (GA, GB, GC, GL, GR, etc) Most Powerchairs with GP

PURCHASE DATE ___ - ___ - ____

FIRST NAME

LAST NAME

ADDRESS

ADDRESS LINE 2

CITY

STATE / PROVINCE

ZIP / POSTAL CODE

E-MAIL ADDRESS

PROVIDER NAME

PROVIDER`S ADDRESS

ADDRESS LINE 2

CITY

STATE / PROVINCE

ZIP / POSTAL CODE

COUNTRY

Product comments:

Rate Provider Experience (Circle One - 1 Bad, 5 Great)

1 2 3 4 5

Fold Here First

Place
Stamp
Here

Golden Technologies
401 Bridge St.
Old Forge, PA 18518

Fold Here Second

BUZZ AROUND LT™

GB108

GB107

GOLDEN

401 Bridge Street
Old Forge, PA 18518
Tel: 800-624-6374
Fax: 800-628-5165
www.goldentech.com