BUZZ AROUND CarryOn®

GOLDEN

Golden Technologies - 401 Bridge Street - Old Forge, PA 18518
Tel: 800-624-6374 - Fax: 800-628-5165 - www.goldentech.com

LIT-GP130-OM, Rev. B

Thank you for purchasing your Carry On. We are honored you have chosen Golden Technologies for your mobility needs.

Standard Packing List:
Power Wheelchair
Owner's Manual
Charger

FOR YOUR RECORDS
Please fill in your Carry On information below. This information will be useful in the event that you ever need to contact Golden Technologies, Inc. concerning your power chair.

Your Carry On

Model _____ Serial Number _____

Date of Purchase_____ Body Color_____

Options _____

Your Golden representative or provider

Name _____

Company _____

Address _____

Please remember to fill in and return your warranty registration card.

DISCLAIMER

We ask that you read this manual completely before operating your new Carry On. Golden Technologies, Inc. is not and cannot be held responsible for any damage or injury incurred due to improper or unsafe use of the Golden Carry On. Golden Technologies, Inc. specifically disclaims responsibility for any bodily injury or property damage that may occur during any use that does not comply with applicable federal, state, or local laws or ordinances.

Literature is current at the time of printing. Golden Technologies reserves the right to make changes to the product or literature at any time.

Contents

Intended Use:
The intended use of the Carry On power wheelchair is to provide mobility to adults, limited to a sitting position and have the capability to operate a simple hand control.

I. Introduction..... 4
II. Safety..... 5
III. EMI / RFI / FCC..... 9
IV. Specifications..... 11
V. Main Components..... 12
VI. Assembly..... 13
VII. Operation..... 15
IIX. Care & Maintenance..... 20
IX. Fault Diagnosis & Troubleshooting..... 21

I. Introduction

Congratulations on the purchase of your new Carry On. The Carry On, combines cutting edge technology with attractive designs that are also highly functional in today's world. We at Golden Technologies, Inc. know that you have chosen a power chair that will give you years of dependable operation and also will enhance the quality of your life by providing you with the mobility to experience an active daily lifestyle.

Even though your new Carry On is both user-friendly and designed for maximum maneuverability in even the tightest spaces, we ask that you please read, understand and follow all of the instructions and suggestions in this manual before you operate your power chair for the first time. The safe use of your new power chair is very important to us.

If you feel that you do not understand the instructions and suggestions presented in this owner's manual, or if, for any reason, you do not feel capable of performing the activities necessary to assemble, disassemble, operate, or maintain your Carry On, please contact your local Golden Technologies, Inc. provider or call Golden Technologies, Inc. Technical Support Services at (800) 624-6374.

Golden Technologies, Inc. cannot be held responsible for personal injury or property damage resulting from the unsafe or the improper use of any of our personal mobility products. Also, Golden Technologies, Inc. cannot be held responsible for personal injury or property damage resulting from attempts to follow instructions, suggestions, and guidelines presented in this owner's manual.

Our Research and Development Department, our Quality Control Department, and our Engineering Department have used the latest product specifications and the latest product design information to manufacture your Carry On. Golden Technologies, Inc. reserves the right to implement changes into our product lines when those changes become desirable or necessary. If changes are implemented into our product line, there may be minor differences between the product you purchased and the illustrations and instructions in this owner's manual.

Please fill out and mail the enclosed warranty registration card. Registration is also available @ www.goldentech.com. We at Golden Technologies, Inc. would appreciate hearing about the dependability of your Carry On and about the convenience of mobility it has provided for you. We would also appreciate hearing about the service you received from your local Golden Technologies, Inc. provider or representative.

Golden Technologies, Inc.
401 Bridge Street
Old Forge, PA 18518

Phone: (570) 451-7477
Fax: (570) 451-7494
Toll free: (800) 624-6374

For more information about our products and services or to send us your comments, please visit our website at www.goldentech.com

II. Safety

Safety Guidelines

The symbols below are used in the owner's manual and/or on the product to identify warnings and to notify you of important safety information. Make sure you read and understand them completely.

WARNING! Indicate(s) a hazardous situation which, if not avoided, could result in death or serious injury. This icon is represented as a black symbol on a yellow triangle with a black border.

MANDATORY! Failure to perform mandatory actions can cause personal injury and/or equipment damage. This icon is represented as a white symbol on a blue dot with a white border.

PROHIBITED! Indicate(s) an action(s) that should not be performed under any circumstance. Failure to adhere can cause personal injury and/or equipment damage. This icon is represented as a red circle and red slash.

Safety Symbols

The symbols below identify warnings, mandatory actions, and prohibited actions. They can be found in the owner's manual and/or on the product. Make sure you understand all safety labels before operating the product. Do not remove safety labels from the product.

Read and follow the owner's manual!

Use Only Lithium Batteries!

Do not use personnel electronic devices!

Pinch/ Crush Hazard

Indoor Use Only

Explosive conditions exist!

Electrical Hazard!

Corrosive chemicals inside battery!

Avoid transmitters!

Hot Surface

Do not place into trash!

Recycle

II. Safety

Your Golden Carry On is a battery-operated vehicle. Please exercise caution and consideration when you are operating it. Driving your Carry On carefully and thoughtfully will help ensure your personal safety and the safety of other people.

Read and follow the owner's manual before operating your power chair.

Do not attempt to use your Carry On on an escalator. Always use an elevator.

Do not carry passengers on your power chair.

Do not operate your Carry On, if it is not functioning properly.

Use caution when driving on soft or uneven surfaces such as grass, gravel and on decks where there is no railing.

Never drive on the roadway, except when you must cross the street.

Always cross streets at intersections and use the most direct route, making sure that your path is clear and that you are visible to motor traffic.

It is not recommended to drive your Carry On, up or down a step or curb that is higher than 1-1/2 inches.

Never back up or down a step or curb.

Never operate your Carry On, while you are under the influence of alcohol.

Do not operate or store your power chair where it will be exposed to rain, snow, mist and below-freezing temperatures.

Never sit on your power chair when it is in freewheel mode and on an incline or decline.

Never sit on your Carry On when it is being transported.

Do not connect or allow anyone except an authorized Golden Technologies, Inc. provider to connect any electrical or mechanical device to your scooter. Unauthorized accessories will void the warranty and may cause injury.

Always keep your feet firmly on the footplate surface when operating your Carry On to eliminate any potential of your feet becoming entangled in the wheels of the power chair.

This product contains chemicals known to the State of California to cause cancer and birth defects or other reproductive harm.

Use caution when operating your Carry On while wearing long baggie clothing or clothing with loose belts, which could become entangled in the wheels of the power chair.

Always fasten down your Carry On securely with an approved tie-down system while transporting your power chair.

Never tether a live animal to your device, doing so may cause harm to yourself and the animal.

Do not operate or store your Carry On where it will be exposed to rain, snow,mist, and below freezing temperatures.

Never transfer on or off of this power wheelchair using the seat backrest, arms, and footrest for support during transfer. This could cause you to lose your balance and could result in personal injury.

Do not modify your power chair in any way that is not authorized by Golden Technologies, Inc.

Should you encounter a problem with the operation of your mobility device such as a mechanical or electrical problem **immediately stop using the product.** Remove the battery pack from the power wheelchair then contact the provider from whom you purchased your mobility device for evaluation of the problem and repair if needed.

Do not disassemble the tire. If disassembly is required, have your authorized Golden Technologies provider perform any necessary maintenance or repair.

Your Carry On weighs 74 lbs., Please be aware of this when attempting to store or transport.

Never lift this device by any movable parts.

No smoking while operating.

Exercise caution when handling packaged product. Hazards of toppling and sharp corners are present on packaged product.

ENTERING AND EXITING

Have your Golden Technologies, Inc. representative determine if it is advisable for you to practice getting on and off your power chair and operating it in the presence of an attendant.

Entering

- Check to be certain that the power is turned OFF. See “Operation” section on pages 15. This will prevent the possibility of accidentally activating the joystick and causing injury to you or to others.
- Check to be certain that your Carry On is not in the freewheel mode. See the “Operation” section.
- Flip up the armrests.
- Flip up the footrest.
- Carefully seat yourself comfortably and securely on the seat.
- Flip down the footrest.
- Flip down the armrests.

Continued on next page...

ENTERING AND EXITING

Exiting

- Make certain that the power is turned off.
- Flip up the armrests.
- Flip up the footrest.
- Carefully stand and step away from the chair.

Never transfer on or off of this power wheelchair using the seat backrest, arms, and footrest for support during transfer. This could cause you to lose your balance and could result in personal injury.

MAXIMUM WEIGHT

Your Carry On has been rated to a maximum payload (passenger and anything else being carried on the power wheelchair) of 300 pounds.

Exceeding the maximum weight capacity will void your warranty and may result in injury to yourself and/or others.

MEDICATION

Always check with your physician to determine if any of the medications you are taking may affect your judgment and/or your ability to operate your Carry On.

Also check with your physician concerning your physical ability to operate a power chair.

DRIVING ON AN INCLINE

- Drive with caution when attempting to negotiate any incline, even handicap access ramps.
- Try to keep your Carry On moving when climbing an incline. If you do come to a stop, restart and accelerate slowly and carefully.

Always climb or descend a gradient by driving straight up or straight down the face of the slope.

Do not attempt to negotiate an incline that is covered with snow, ice, cut or wet grass, leaves, or any other potentially hazardous material.

Do not try to descend or climb a slope whose gradient is greater than the recommended maximum incline of 6 degrees.

If, while you are driving down a slope, your power chair starts to move faster than you feel is safe, release the joystick lever and allow your Carry On to come to a stop. When you feel that you again have control of your power chair, push the joystick lever forward and continue safely down the remainder of the slope.

Do not traverse or drive across the face of a gradient.

Do not back down an incline.

III. EMI / RFI / FCC

The rapid development of electronics, especially in the area of communications, has saturated our environment with electromagnetic (radio) waves that are emitted by television transmitters, cellular phones, citizen's band radios (CBs), amateur radios (HAM radios), wireless computer links, microwave transmitters, paging transmitters, etc. These electromagnetic (EM) waves are invisible and increase in strength the closer one gets to the source of transmission. When these energy waves act upon electrical devices and cause them to malfunction or to function in an erratic or uncontrolled manner, they are referred to as Electromagnetic Interference (EMI) or Radio Frequency Interference (RFI).

EMI/RFI AND YOUR Carry On

All electrically powered vehicles, including power chairs are susceptible to EMI/RFI. This interference could result in abnormal or unintended movement of your Golden Carry On.

Unintended movement or brake release could cause an accident or injury.

The FDA has determined that each make and model of power chair can resist EMI/RFI to a certain level. The higher the level of immunity, the greater the degree of protection from EMI/RFI measured in volts per meter (V/m). The FDA has also determined that current technology is capable of providing 20 V/m of immunity to EMI/RFI, which would provide useful protection against common sources of interference. This product has been tested and has passed an immunity level of 20 V/m

EMI/RFI RECOMMENDATIONS

PROHIBITED! Do not turn on or use hand-held personal electronic communication devices such as cellular phones, walkie-talkies, or CB radios while your power chair is turned on.

- Be aware of any nearby transmitters (radio, television, microwave, etc.) on your intended route and avoid operation your of power chair close to any of those transmitters.
- Turn off the power if your Carry On is going to be in a stationary position for any length of time.
- Be aware that adding accessories or components or modifying your power chair may make it more susceptible to EMI/RFI.
- If unintended movement or brake release occurs, turn your power chair off as soon as it is safe to do so.
- Report all incidents of unintended movement or brake failure to your Golden Technologies representative or to Golden Technologies.

Turn off your power chair as soon as it is safely possible if unintended or uncontrollable motion occurs or if unintended brake release occurs.

III. EMI / RFI / FCC

FCC RULES PART 15

This device complies with Part 15 of the FCC Rules. Operation is subject to the following two conditions: (1) this device may not cause harmful interference, and (2) this device must accept any interference received, including interference that may cause undesired operation.

Any changes or modifications to this unit not expressly approved by the party responsible for compliance could void the user's authority to operate the equipment.

NOTE: This equipment has been tested and found to comply with the limits for a Class B digital device, pursuant to Part 15 of the FCC Rules. These limits are designed to provide reasonable protection against harmful interference in a residential installation. This equipment generates, uses, and can radiate radio frequency energy and, if not installed and used in accordance with the instructions, may cause harmful interference to radio communications. However, there is no guarantee that interference will not occur in a particular installation. If this equipment does cause harmful interference to radio or television reception, which can be determined by turning the equipment off and on, the users encouraged to try to correct the interference by one or more of the following measures:(1) Reorient or relocate the receiving antenna.(2) Increase the separation between the equipment and receiver.(3) Connect the equipment into an outlet on a circuit different from that to which the receiver is connected. (4) Consult the dealer or an experienced radio/TV technician for help.

IV. Specifications

Model Number	**GP130**
Medicare Code	N/A
Weight Capacity	300
Drive Wheels	Center
Maximum Speed	3.85 MPH
Operating Range	12.5 Miles
Ground Clearance	2″
Turning Radius	21.25″
Type Batteries	Li-Ion, 12.5Ah
Colors	Red, Blue
Freewheel Mode	Yes
Electro-Mechanical Brake	Yes
Charger	Off-Board, 2A
Controller	40A
Dimensions:	
Length	38″
Width	24″
Height (ground to top of back of seat)	34.25″
Ground to Top of Seat	21″
Weight of Unit (assembled)	74 lbs.
Base	46 lbs.
Seat	22 lbs.
Battery	6 lbs.
Tires:	
Drive Wheels	7.75″
Casters	5.5″
Seat:	
Back Height	15.5″
Width X Depth	18″ X 17″
Color	Black
Warranty:	
Frame	5 Years
Drivetrain	13 Months
Electronics	13 Months
Batteries	12 Months

Specifications are subject to a tolerance variation of ±2%.
Battery range tested at 200 lbs. and will vary due to rider weight, drive surface, terrain and battery type.

V. Main Components

VI. Assembly

FUSE

A fuse will need to be installed to operate.

1. Remove the battery pack see page 16.

2. Remove the controller cover under the basket.

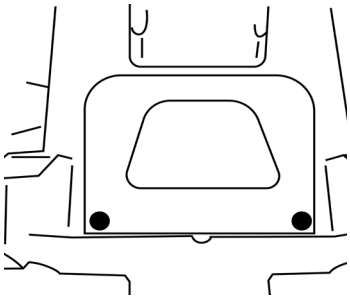

3. The fuse can be found in its holder once you open the cover. Install the fuse in the slot shown.

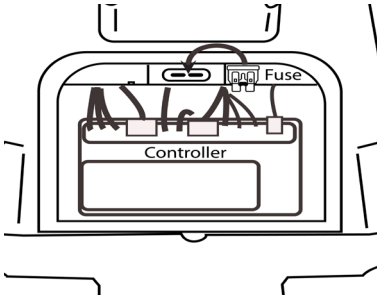

FOLDABLE SEATPOST

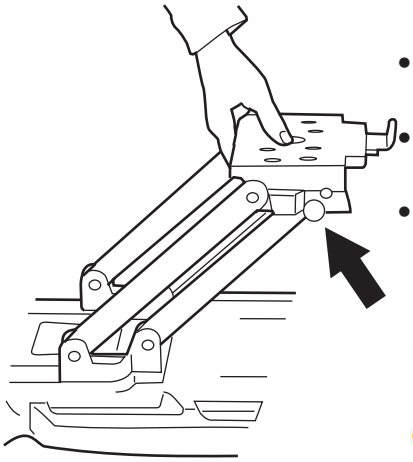

- To fold and unfold the seatpost, grasp the two spring loaded black retaining pins.
- While holding the pins outward, pull the seatpost upward and let go of the pins.
- Once the seatpost is fully erect an audible click can be heard signifying it is locked in place.

Before folding the seatpost empty and remove the basket to prevent damage, accident or injury.

When folding and unfolding be aware of all moving parts as Pinch Points are present.

Be sure seat post is locked into place before installing seat.

SEAT ASSEMBLY

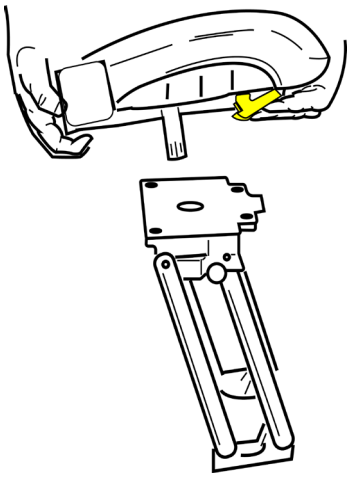

- Once the seatpost is locked. Grasp the seat and depress the yellow locking lever as shown.
- Insert the seat into the seatpost and release the lever.
- An audible click can be heard indicating the seat is locked onto the post.

Installing the seat onto the post also makes an electrical connection. This electrical connection is critical to performance. Be sure the seat is fully connected to the post before operating.

ARM INSTALLATION

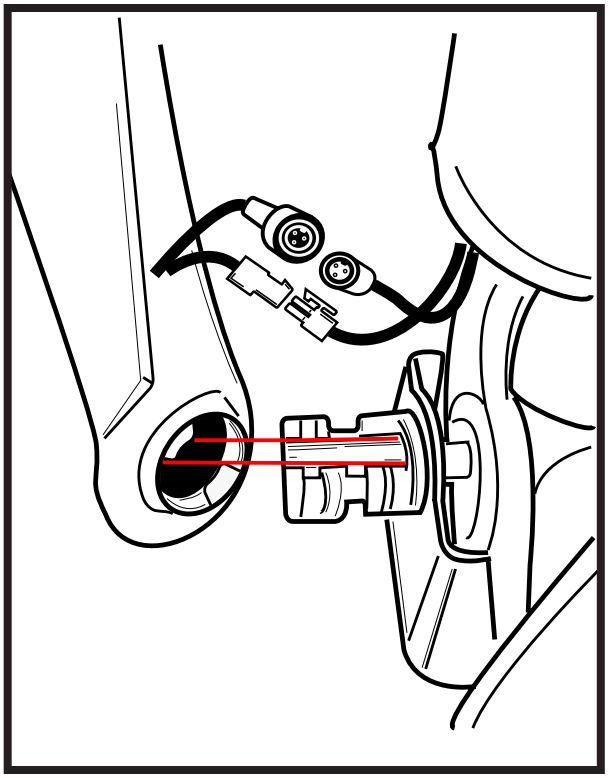

- Line up the two teeth on the arm assembly with the cavity on the seat assembly as shown.
- Once the arm is fully inserted, rotate it into its downward position to lock it in.
- Connect the wiring harnesses on the right arm and the seat.
- Be sure the wire harnesses are connected on the inside of the arm bracket so they are protected.

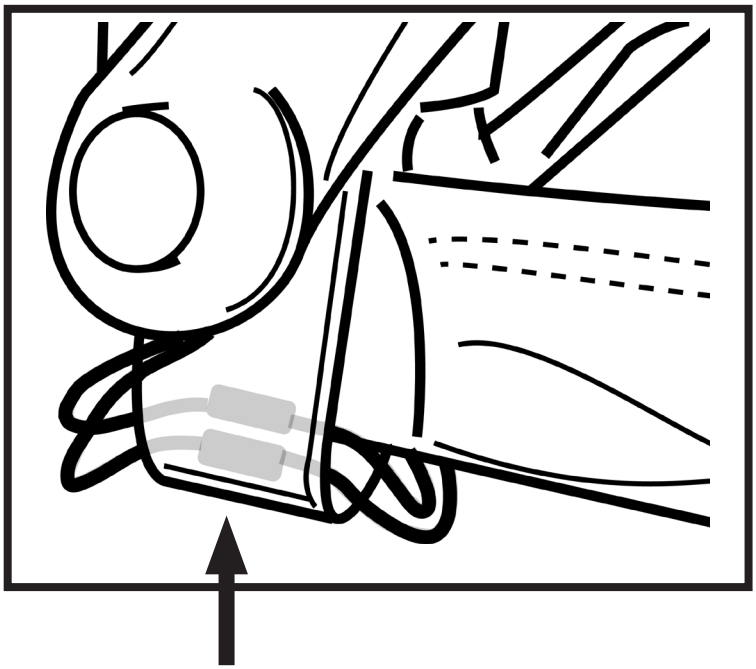

VII. Operation

Read and follow the owner's manual before operating your power chair.

Your Carry On is simple to operate. However, for your safety and the safety of others, Golden Technologies, Inc. recommends that you carefully read and understand the following operating instructions. We also recommend that you practice operating your Carry On in an area free of any obstacles. Once you have gained confidence in your ability to control your power wheelchair, you will more easily be able to operate it in normal daily conditions.

Before driving your Carry On, take note of your environment and set your speed control accordingly. For indoor driving, we recommend that you select the lowest speed setting. For outdoor driving, we recommend that you select a speed setting at which you feel comfortable, safe, and in control of your power wheelchair. Familiarize yourself with the features of your Carry On described below and follow the instructions to safely operate your power wheelchair.

JOYSTICK FEATURES

Battery Gauge: This gauge will display 5 (1 red, 2 yellow, and 2 green) LED lights when fully charged. The color and number of illuminated LED lights is a direct indication of your batteries charge. GREEN indicates a good charge status, YELLOW indicates a caution status, and RED indicates a charge is required for your power wheelchair to continue to operate.

Power Button: This switch supplies power to the control system. Use this switch to turn your power whee chair on and off under normal circumstances. Do not use the power button to STOP the power wheelchair unless an EMERGENCY situation occurs.

Speed Down Button: Pressing this button will decrease the maximum speed setting of your power wheelchair.

Speed Setting LED Array: This array indicates the current maximum speed setting of your power wheelchair. This speed setting can be adjusted through the speed up button or speed down button by the user.

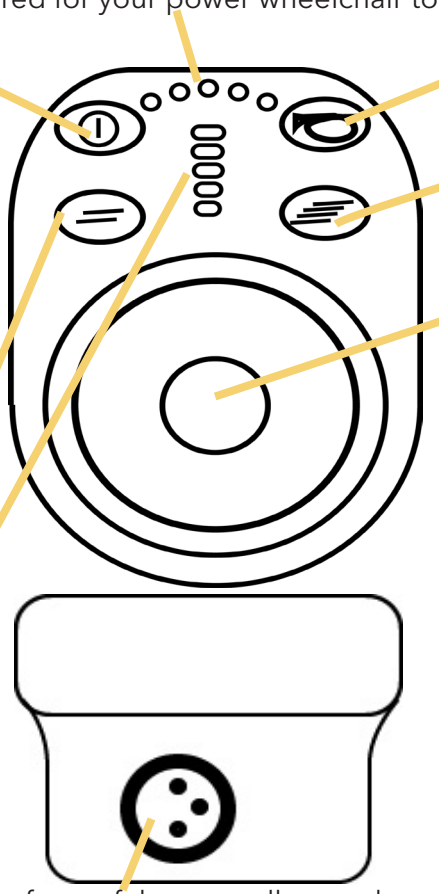

Horn Button: The horn will sound when you press this button.

Speed Up Button: Pressing this button will increase the maximum speed setting of your power wheelchair.

Joystick: The joystick is used to control the power wheelchair's movement including its speed and direction. The further you move the joystick from its center position, the faster the power wheelchair moves. Whenever you release the joystick, it will automatically return to the center position and the brake will engage to stop the power wheelchair.

Charger Socket: Located at the front of the controller used to charge the batteries by connecting only the supplied battery charger.

FREEWHEEL MODE

Your Carry On is equipped with a Freewheel Mode feature which will, when activated, allow this device to be pushed manually.

Turn the unit off. You will find two red brake levers in the center of the unit, one attached to each motor. Push them back into the unlocked position.

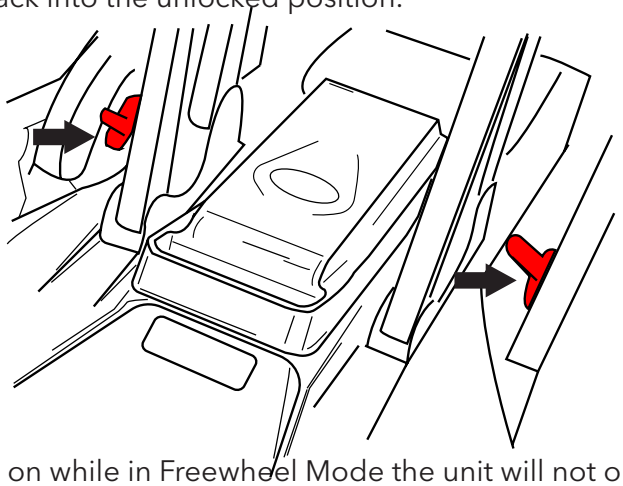

If powered on while in Freewheel Mode the unit will not operate until the brake levers are put into the locked position.

Never sit on your power chair when it is in freewheel mode and on an incline or decline.

BATTERY PACK AND CHARGING

Battery maintenance is the most important part of maintaining your power wheelchair. Keeping the battery pack fully charged helps to extend battery life. Use the following guidelines to help keep your battery pack in optimum condition.

IMPORTANT! Fully charge the battery pack prior to its initial use. This brings the battery pack up to about 90 percent of its peak performance level. After each use, charge the battery pack 5-8 hours. After approximately four or five charging cycles,the battery pack will reach 100 percent charge and last for an extend period.

- For daily use, keep batteries fully charged. We recommend that you plug in the off-board charger after each use and charge 5-8 hours.
- If you are not going to use the power wheelchair for more than a week, fully charge the battery pack and then remove it from the power wheelchair.

Use only the off-board charger supplied for all charging. The use of any other charger can cause a dangerous situation resulting in personal injury, injury to others, and property damage.

Continued on next page...

BATTERY PACK AND CHARGING

Battery Charging

Your Carry On charging system is designed for your safety and for your convenience. Follow the steps below to recharge the battery pack.

1. Position your unit close to a standard wall electrical outlet.
2. Turn off the power on the joystick and be sure the brake handles are in the locked position.
3. Insert the XLR plug onto the XLR port on the joystick or (if you have battery removed from the unit) on the XLR port on the back of the battery.
4. Insert the plug at the other end of the charger power cord into a standard electrical wall outlet. The LED light on the charger will illuminate RED while charging, and GREEN when fully charged.
5. Disconnect the charger power cord from the wall outlet and from the Joystick or battery pack when the batteries are fully charged.

Joystick Location

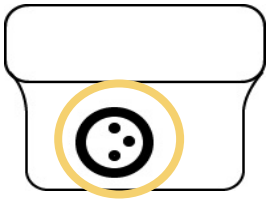

Battery Location

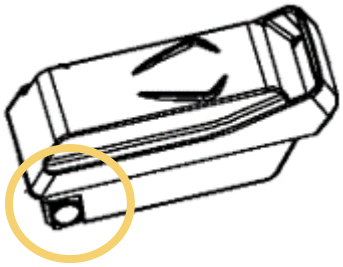

Failure to align and/or insert the plug in the correct orientation may damage the controller and render your power wheelchair nonoperational.

Battery Pack Removal

Your Carry On is equipped with a removable battery pack. The pack slides and locks into place easily but to remove it, you will need to press the "PUSH" button on the unit near the handle of the pack.

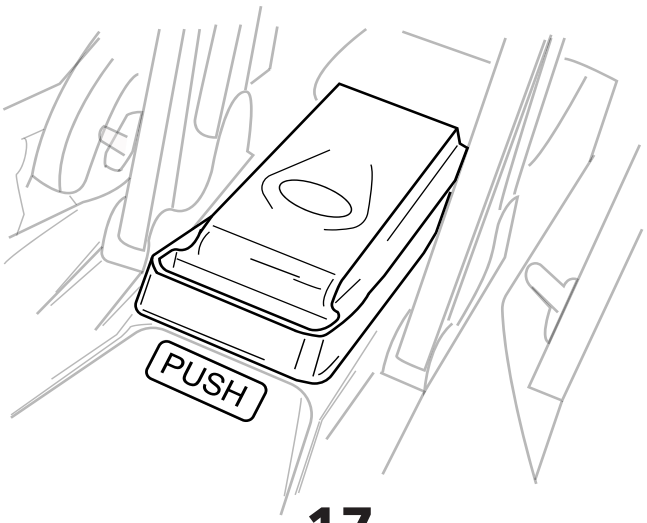

VII. Operation

DRIVING

Your Carry On is simple to operate. However, for your safety and the safety of others, Golden Technologies, Inc. recommends that you carefully read and understand the following operating instructions. We also recommend that you practice operating your Carry On in an area free of any obstacles. Once you have gained confidence in your ability to control your power wheelchair, you will more easily be able to operate it in normal daily conditions.

1. Make sure the power wheelchair is powered Off.
2. Make sure the two freewheel levers are in the Locked position.
3. Lift the footrest up.
4. Carefully seat yourself comfortably and securely on the seat.
5. Power On the unit and operate as described in this manual.

Always shut down the power by pressing the power button on the controller prior to getting into or out of the power wheelchair. Failure to comply may result in inadvertent activation of the joystick, causing the power wheelchair to move and possible injury to you and/or others around you.

Always make sure the freewheel levers are in the "DRIVE" position prior to getting into or out of the power wheelchair. Failure to comply can cause the power wheelchair to move resulting in an injury.

Keep feet firmly on footrest at all times.

The further you move the joystick from its center position, the faster the power wheelchair moves.

Never stand on the footrest or use the footrest as an aide to get on the power wheelchair. Using the footrest in is manor can cause instability resulting in an injury.

If you are unsure of yourself start out on the lowest speed setting.

Ending Your Driving Session

Be sure the unit is completely powered off and complete the opposite of these steps, also reference "Entering and Exiting" in the Safety section on page 8 for additional information.

HELPFUL DRIVING TIPS AND INSTRUCTIONS

Control Through Tight Spots

As you use your Carry On to increase your mobility, you will undoubtedly encounter some obstacles that will require practice to negotiate smoothly and safely. Below are some common obstacles that you may meet during the daily use of your power wheelchair. Listed with those obstacles are some driving tips that should help you conquer those obstacles. Learn and follow those tips, and with surprising ease you will soon be in control of your power chair as you maneuver it through doors, up and down ramps, up and over curbs, through grass and gravel, and up and down inclines.

Continued on next page...

HELPFUL DRIVING TIPS AND INSTRUCTIONS

Doors

- Approach any unfamiliar door slowly.
- Notice if the door has a door knob or a push bar.
- Determine if the door opens towards you or away from you.
- Do not try to use your own strength to open the door. Learn to use the power of your power wheelchair to do the majority of the work for you.

If the door opens away from you:

1. Use one hand to turn the door knob or to operate the push bar.
2. Use your other hand to control the power chair by gently operating the joystick to move your power wheelchair slowly forward.
3. Use your arm to push the door gently open.
4. Drive through the doorway.
5. If it is a self-closing door, it will close behind you.
6. If it is not a self-closing door, stop your power chair when it is clear of the door and use your hand to push the door closed.

If the door opens towards you:

1. Use one hand to turn the door knob or to pull the handle.
2. Keep your grip on the door knob or on the handle.
3. Use your other hand to control the power wheelchair by gently operating the joystick to move your power chair slowly backward.
4. Allow the power of your Carry On to pull the door completely open.
5. When the door is completely open, stop your power wheelchair.
6. Drive through the doorway while keeping your hand on the door to prevent it from hitting or blocking your power wheelchair.
7. If it is a self-closing door, it will close behind you. If it is not a self-closing door, pull it closed behind you.
8. If it is not a self-closing door, pull it closed behind you.

Ramps

Because of the American Disabilities Act (ADA), many buildings are fitted with ramps that provide access for power wheelchairs and for other mobility vehicles.

Please read and thoroughly understand “Safety” and “Driving On An Incline” sections of this manual.

IIX. Care & Maintenance

ROUTINE MAINTENANCE

Your power wheelchair requires a minimal amount of care and maintenance. If you do not feel confident in your ability to perform the maintenance listed below, you can schedule an inspection and maintenance with your retailer.

- Make sure your battery pack is fully charged daily. See "Battery Charging".
- While turned off, check the joystick control daily for damage, and make sure it returns to the neutral position. If any defects are observed, contact your retailer. Do not attempt to repair it yourself!
- Inspect the seating system, arms, and footplate daily for loose hardware, excessive wear, or damage. If any defects are observed, contact your retailer.
- Regularly inspect your power wheelchair's tires for signs of wear.
- Regularly inspect all exposed harnessing and connections for wear, damage, and corrosion. Have your retailer repair or replace any damaged harnesses or connectors.
- Keep the electrical components (charger and joystick control) free from moisture. If these items do become exposed to moisture, let them dry thoroughly before attempting to operate your power wheelchair again.
- Periodically check all fasteners for tightness, wear, and corrosion. If any of these are present, turn off the power wheelchair and contact your retailer.
- All wheel bearings are permanently lubricated and sealed. No additional lubrication is required.

Be careful of pinch points and sharp metal parts (wear gloves).

We recommend that you check the following:

Tire Tread: Regularly visually inspect the tire tread. If the remaining tread is less than 1/32 of an inch, have your local Golden retailer replace the worn tires.

Joystick Control: Protect the joystick control from adverse weather conditions. Moisture can damage the controller and void your power wheelchair's warranty.

Cleaning: Clean the body of your power wheelchair with a damp cloth. Use a cool water mixed with a mild soap to remove dirt and oils. Dry with a clean soft cloth. Buff by hand with a soft cloth.

Do not use free-flowing water to clean your Carry On. Water and extreme temperatures are the main elements that can adversely affect your power wheelchair and its performance.

IX. Fault Diagnosis & Troubleshooting

GOLDEN

Fault Codes

For your convenience, the Carry On has an automatic fault warning system. If, when powered up, there is a fault with the system, the joystick lights will flash. Each differing fault will produce a different qaunity of flashes. Some faults will also trigger the horn to sound coninuously until the fault is resolved. These faults are described in the table below.

Fault Codes	Fault Diagnosis	Troubleshooting
1	Low Battery	Check if all battery connections are secure. Charge your battery.
2	Left Motor Fault	Check all left motor connections.
3	Left Motor Fault	Check all left motor connections. This could also indicate a stall condition, check if any obstructions are preventing the motor from spinning.
4	Right Motor Fault	Check all right motor connections.
5	Right Motor Fault	Check all right motor connections. This could also indicate a stall condition, check if any obstructions are preventing the motor from spinning.
7	Joystick Fault	Joystick is not center when pwering up. Restart unit be sure your hand is not touching the joystick. Check all connections.
8	Controller Fault	Check all connections to controller.
9	Motor Brake Fault	Your unit maybe in freewheel, check your freewheel levers.
10	Excessive Battery Voltage	Battery is overcharged, overheated. Check all battery connections, be sure your charger is operating properly.

WARRANTY

Consumer Limited Warranty
Power Wheelchairs

Golden Technologies has provided information throughout the owner's manual in regards to proper usage and care of your power wheelchair. Failure to adhere to this information will void the warranty of the power wheelchair, it's parts and the battery pack supplied by Golden Technologies.

The following warranty is granted only to the INITIAL Consumer who has purchased our product and commences on the Date of Purchase by the Consumer from an Authorized Golden Technologies' Retailer. The Consumer must have a warranty registration card filed with Golden Technologies to receive service.

The warranty covers the following power wheelchair models unless otherwise noted:

- CarryOn GP130

Five-Year Limited Warranty:
For the period of five years from the date of purchase, in the event of defective materials or workmanship, Golden Technologies will repair or replace at our option any of the following structural frame components found to be defective by an authorized Golden Technologies representative:

- Aluminum Frame*

Thirteen Month Limited Warranty
For the period of thirteen months from the date of purchase, in the event of defective materials or workmanship, Golden Technologies will repair or replace at our option any of the following structural frame components found to be defective by an authorized Golden Technologies representative:

- Anti-Tip Forks
- Caster Forks
- Armrests
- Footrest

For the period of thirteen months from the date of purchase, in the event of defective materials or workmanship, Golden Technologies will repair or replace at our option any of the following drive train components found to be defective by an authorized Golden Technologies representative:

- Motor/Gearbox Assembly
- Brake Assembly (electrical function only)

Note: An increase in operating noise of the motor/gearbox DOES NOT constitute a defect. With normal wear and tear, operating noise is expected to increase.

For the period of thirteen months from the date of purchase, in the event of defective materials or workmanship, Golden Technologies will repair or replace at our option any of the following electronic assemblies found to be defective by an authorized Golden Technologies representative:

- Electronic Controller
- Battery Charger
- Wire Harness(es) (excludes boot covers)

Note: While charging batteries, it is normal for the battery charger to heat up. Heat coming from the battery charger DOES NOT constitute a defect.

For the period of thirteen months from the date of purchase, in the event of defective materials or workmanship, Golden Technologies will repair or replace at our option any of the following parts found to be defective by an authorized Golden Technologies representative:

- Bearings
- Bushings
- Rubber Components (excludes tires and all wear parts)
- Plastic Components (excludes body & all wear parts)

Twelve Month Limited Warranty
For the period of twelve months from the date of purchase, in the event of defective materials or workmanship, Golden Technologies will replace the batteries supplied by Golden Technologies if found to be defective by an authorized Golden Technologies representative.

WARRANTY

Consumer Limited Warranty
Power Wheelchair (continued)

Items not mentioned or listed are covered at the discretion of Golden Technologies. Any accessories, standard or optional, supplied by Golden Technologies, are covered for a period of one year from the date of purchase with the particular unit.

Warranty Exclusions:

Golden Technologies does not provide warranty on any of the following items which may require replacement due to the normal wear and tear of day to day usage:

- Tires and Tubes
- Bulbs/Fuses
- ABS Plastic Shrouds
- Battery Cases
- Armrest Pads
- Brake Pads
- Motor Brushes
- Upholstery

This warranty also excludes the following:

- Loss or theft of components
- Damage caused by:
  - Battery fluid spillage or leakage.
  - Abuse, misuse, accident or negligence.
  - Improper operation, maintenance or storage.
  - Commercial use or use other than normal.
  - Repairs and/or modifications made to any part without the specific consent of Golden Technologies.
  - Exceeding the specified weight capacity of the unit.
  - Accessories other than those supplied or approved by Golden Technologies.
  - Failure to adhere to the product instructions.
  - Acts of Nature, such as lightning strikes, earthquakes, etc….
  - Circumstances beyond the control of Golden Technologies.

- **ANY PARTS ALTERED OR REPAIRED BY UNAUTHORIZED PERSON.**

Warranty Service:
Warranty Service must be performed by an authorized Golden Technologies representative. Golden Technologies reserves the right to replace warranted part(s) with refurbished or new part(s) at our discretion. All labor charges, service calls, transportation costs or any other charge(s) associated with the installation of any warranted part(s) are the responsibility of the consumer. Warranty is for the replacement of the parts only and does not include freight for the replacement parts. Consumers are not to return any item(s) to Golden Technologies without prior written authorization. Any damages incurred while warranted part(s) are in transport are the sole responsibility of the consumer.

There is no other express warranty.

Implied warranties, including those of merchantability and fitness for a particular purpose are excluded. Liabilities for consequential damages are excluded.

This warranty gives you specific rights and you may also have other rights which may vary from state to state.

GOLDEN PRODUCT REGISTRATION

Register Now ***To Lock In Your Warranty*** and Receive Important Product Updates

SAVE TIME - REGISTER ONLINE: WWW.GOLDENTECH.COM

SERIAL NUMBER

Most Lift Chairs Have On Controller Wire or Back Rail of the Metal Frame
Most Scooters & Powerchairs On Seat Post, Under/On Battery, or Under Carpet

PRODUCT MODEL NUMBER

Most Lift Chairs Start with PR (PR401, PR510, etc).
Most Scooters with G (GA, GB, GC, GL, GR, etc) Most Powerchairs with GP

PURCHASE DATE __ - __ - ____

FIRST NAME

LAST NAME

ADDRESS

ADDRESS LINE 2

CITY

STATE / PROVINCE

ZIP / POSTAL CODE

E-MAIL ADDRESS

PROVIDER NAME

PROVIDER`S ADDRESS

ADDRESS LINE 2

CITY

STATE / PROVINCE

ZIP / POSTAL CODE

COUNTRY

Product comments:

Rate Provider Experience (Circle One - 1 Bad, 5 Great)

1 2 3 4 5

Fold Here First

Place
Stamp
Here

Golden Technologies
401 Bridge St.
Old Forge, PA 18518

Fold Here Second

GOLDEN

LIT-GP130-OM, Rev. B