GOLDEN Stride

Owner's Manual
Rear Wheel Drive
Power WheelChair
Model GP301

GOLDEN

Golden Technologies - 401 Bridge Street - Old Forge, PA 18518

Tel: 800-624-6374 - Fax: 800-628-5165 - www.goldentech.com

LIT-GP301-OM_04.29.2024

Thank you for purchasing your Stride™. We are honored you have chosen Golden Technologies for your mobility needs.

Stride™ (Model GP301)

Standard Packing List:
Power wheelchair with Under-the-Seat Pouch
1 Owner's Manual
1 Battery Pack
1 Safety Flag
1 Joystick Control
1 Battery Charger

FOR YOUR RECORDS

Please fill in your Stride™ information below. This information will be useful in the event that you ever need to contact Golden Technologies, Inc. concerning your power chair.

Your Stride™

Model _____ Serial Number _____

Date of Purchase _____ Body Color _____

Options _____

Your Golden representative or provider

Name _____

Company _____

Address _____

Please remember to fill in and return your warranty registration card.

DISCLAIMER

We ask that you read this manual completely before operating your new Stride™. Golden Technologies, Inc. is not and cannot be held responsible for any damage or injury incurred due to improper or unsafe use of the Golden Stride™. Golden Technologies, Inc. specifically disclaims responsibility for any bodily injury or property damage that may occur during any use that does not comply with applicable federal, state, or local laws or ordinances.

Intended Use: The intended use of the Stride ™ power wheelchair is to provide mobility to adults, limited to a sitting position and have the capability to operate a simple hand control.

CONTENTS

I. Introduction..... 4-5

II. Safety..... 6-9

III. EMI/RFI..... 10

IV. Technical Specifications Stride ™..... 11

V. Main Components..... 12

VI. Assembly and Folding your Stride ™.....13-14

VII. Operation.....15-18
- Control Features.....15
- Battery Pack and Charging.....16-17
- Riding Your Stride ™.....17-18
- Control Through Tight Spots.....19

VIII. Fault Diagnosis and Troubleshooting.....20

IX. Care and Maintenance.....21-22

X. Warranty.....23-24
- Warranty/Registration Card.....25

Scan with your smartphone camera or visit **www.goldentech.com/manuals** to view or download this document in other languages.

I. INTRODUCTION

Congratulations on the purchase of your new Stride™. The Stride™, combines cutting edge technology with attractive designs that are also highly functional in today's world. We at Golden Technologies, Inc. know that you have chosen a power chair that will give you years of dependable operation and also will enhance the quality of your life by providing you with the mobility to experience an active daily lifestyle.

Even though your new Stride™ is both user-friendly and designed for maximum maneuverability in even the tightest spaces, we ask that you please read, understand and follow all of the instructions and suggestions in this manual before you operate your power chair for the first time. The safe use of your new power chair is very important to us.

If you feel that you do not understand the instructions and suggestions presented in this owner's manual, or if, for any reason, you do not feel capable of performing the activities necessary to assemble, disassemble, operate, or maintain your Stride™, please contact your local Golden Technologies, Inc. provider or call Golden Technologies, Inc. Technical Support Services at (800) 624-6374.

Golden Technologies, Inc. cannot be held responsible for personal injury or property damage resulting from the unsafe or the improper use of any of our personal mobility products. Also, Golden Technologies, Inc. cannot be held responsible for personal injury or property damage resulting from attempts to follow instructions, suggestions, and guidelines presented in this owner's manual.

Our Research and Development Department, our Quality Control Department, and our Engineering Department have used the latest product specifications and the latest product design information to manufacture your Stride™. Golden Technologies, Inc. reserves the right to implement changes into our product lines when those changes become desirable or necessary. If changes are implemented into our product line, there may be minor differences between the product you purchased and the illustrations and instructions in this owner's
manual.

Please fill out and mail the enclosed warranty registration card. Registration is also available @ www.goldentech.com. We at Golden Technologies, Inc. would appreciate hearing about the dependability of your Stride™ and about the convenience of mobility it has provided for you. We would also appreciate hearing about the service you received from your local Golden Technologies, Inc. provider or representative.

Golden Technologies, Inc.
401 Bridge Street
Old Forge, PA 18518

Phone: (570) 451-7477
Fax: (570) 451-7494
Toll free: (800) 624-6374

For more information about our products and services or to send us your comments, please visit our website at www.goldentech.com

I. INTRODUCTION

Accessories for the Stride™

A variety of accessories are available for your Golden Stride™. Please contact your Authorized Golden Technologies Provider for more information or to order.

• Cane Holder Tube	• Crutch Holder	• Safety Flag
• Cup Holder	• Power Chair Cover	• Seat Belt

Safety Guidelines

The symbols below are used in the owner's manual and/or on the product to identify warnings and to notify you of important safety information. Make sure you read and understand them completely.

WARNING! Indicate(s) a hazardous situation which, if not avoided, could result in death or serious injury. This icon is represented as a black symbol on a yellow triangle with a black border.

MANDATORY! Failure to perform mandatory actions can cause personal injury and/or equipment damage. This icon is represented as a white symbol on a blue dot with a white border.

PROHIBITED! Indicate(s) an action(s) that should not be performed under any circumstance. Failure to adhere can cause personal injury and/or equipment damage. This icon is represented as a red circle and red slash.

Safety Symbols

The symbols below identify warnings, mandatory actions, and prohibited actions. They can be found in the owner's manual and/or on the product. Make sure you understand all safety labels before operating the product. Do not remove safety labels from the product.

Read and follow the owner's manual!

Explosive conditions exist!

Indoor use only!

Use only Lithium-ion batteries!

Avoid transmitters!

Hot surface!

Pinch/Crush Hazard!

Do not place into trash!

Electrical hazard!

Corrosive chemicals inside battery!

Recycle

Do not use personal electronic devices!

II. SAFETY

Your Golden Stride™ is a battery-operated vehicle. Please exercise caution and consideration when you are operating it. Driving your Stride™ carefully and thoughtfully will help ensure your personal safety and the safety of other people.

Read and follow the owner's manual before operating your power chair.

NOTICE Before learning to operate your Stride™, have your Golden Technologies, Inc. representative determine if it is advisable for you to practice getting on and off your power chair and operating it in the presence of an attendant.

BEFORE getting on your Stride™
- Check to be certain that the power is turned OFF. See "Operation" section on pages 21-27. This will eliminate the possibility of accidentally activating the joystick and causing injury to you or to others.
- Check to be certain that your Stride™ is not in the freewheel mode. See the "Operation" section on pages 21-27.
- Flip up the armrests.
- Flip up the footrest.

Getting ON your Stride™
- Carefully seat yourself comfortably and securely on the seat.
- Flip down the footrest.
- Flip down the armrests.
- Fasten the seat belt.

Getting OFF your Stride™
- Make certain that the power is turned off.
- Unfasten the seat belt.
- Flip up the armrests.
- Flip up the footrest.
- Carefully stand and step away from the chair.

MAXIMUM WEIGHT

Your Stride™ has been rated to a maximum payload (passenger and anything else being carried on the power wheelchair) of 265 pounds. Exceeding the maximum weight rating will void your warranty.

WARNING Exceeding the maximum weight capacity will void your warranty and may result in injury to yourself and/or others.

II. SAFETY

DRIVING ON AN INCLINE

• Drive with caution when attempting to negotiate any incline, even handicap access ramps.

• Try to keep your Stride™ moving when climbing an incline. If you do come to a stop, restart and accelerate slowly and carefully.

WARNING

• Always climb or descend a gradient by driving straight up or straight down the face of the slope.

• Do not traverse or drive across the face of a gradient.

• Do not attempt to negotiate an incline that is covered with snow, ice, cut or wet grass, leaves, or any other potentially hazardous material.

• Do not back down an incline.

• Do not try to descend or climb a slope whose gradient is greater than the recommended maximum incline of 6 degrees.

WARNING If, while you are driving down a slope, your power chair starts to move faster than you feel is safe, release the joystick lever and allow your Stride™ to come to a stop. When you feel that you again have control of your power chair, push the joystick lever forward and continue safely down the remainder of the slope.

MEDICATION

Always check with your physician to determine if any of the medications you are taking may affect your judgment and/or your ability to operate your Stride™. Also check with your physician concerning your physical ability to operate a power chair.

II. SAFETY

SAFETY RULES

WARNING

• Do not attempt to use your Stride™ on an escalator. Always use an elevator.

• Do not carry passengers on your power chair.

• Do not operate your Stride™, if it is not functioning properly.

• Use caution when driving on soft or uneven surfaces such as grass, gravel and on decks where there is no railing.

• Never drive on the roadway, except when you must cross the street.

• Always cross streets at intersections and use the most direct route, making sure that your path is clear and that you are visible to motor traffic.

• It is not recommended to drive your Stride™, up or down a step or curb that is higher than 1-1/2 inches.

• Never back up or down a step or curb.

• Never operate your Stride™, while you are under the influence of alcohol.

• Do not operate or store your power chair where it will be exposed to rain, snow, mist and below-freezing temperatures.

• Do not operate your power chair on slippery, icy or salted surfaces.

• Never sit on your power chair when it is in freewheel mode and on an incline or decline.

• Do not modify your power chair in any way that is not authorized by Golden Technologies, Inc.

• Do not disassemble the tire. If disassembly is required, have your authorized Golden Technologies provider perform any necessary maintenance or repair.

• Do not attempt to inflate the tires of your Stride™. Your power chair is equipped with foam-filled flat free tires that do not require inflation.

• Never sit on your Stride™ when it is being transported.

• Always fasten down your Stride™ securely with an approved tie-down system while transporting your power chair.

• Use caution when operating your Stride™ while wearing long baggie clothing or clothing with loose belts, which could become entangled in the wheels of the power chair.

• Always keep your feet firmly on the footplate surface when operating your Stride™ to eliminate any potential of your feet becoming entangled in the wheels of the power chair.

WARNING This product contains chemicals known to the State of California to cause cancer and birth defects or other reproductive harm.

II. SAFETY

Please be sure to follow these important safety warnings.

WARNING Never transfer on or off of this power wheelchair using the seat backrest for support during transfer. This could cause you to lose your balance and could result in personal INJURY.

WARNING Do not modify your power chair in any way that is not authorized by Golden Technologies, Inc.

WARNING Do not connect or allow anyone except an authorized Golden Technologies representative to connect any electrical or mechanical device to your Stride™. Unauthorized accessories will void the warranty and may cause injury.

Please be sure to follow this important warning if you encounter a problem with your mobility device.

WARNING Should you encounter a problem with the operation of your mobility device such as a mechanical or electrical problem immediately stop using the product. Remove the battery pack from the power wheelchair then contact the provider from whom you purchased your mobility device for evaluation of the problem and repair if needed.

FCC Rules Part 15

This device complies with Part 15 of the FCC Rules. Operation is subject to the following two conditions: (1) this device may not cause harmful interference, and (2) this device must accept any interference received, including interference that may cause undesired operation.

WARNING Any changes or modifications to this unit not expressly approved by the party responsible for compliance could void the user's authority to operate the equipment.

NOTE: This equipment has been tested and found to comply with the limits for a Class B digital device, pursuant to Part 15 of the FCC Rules. These limits are designed to provide reasonable protection against harmful interference in a residential installation. This equipment generates, uses, and can radiate radio frequency energy and, if not installed and used in accordance with the instructions, may cause harmful interference to radio communications. However, there is no guarantee that interference will not occur in a particular installation. If this equipment does cause harmful interference to radio or television reception, which can be determined by turning the equipment off and on, the users encouraged to try to correct the interference by one or more of the following measures:(1) Reorient or relocate the receiving antenna.(2) Increase the separation between the equipment and receiver.(3) Connect the equipment into an outlet on a circuit different from that to which the receiver is connected. (4) Consult the dealer or an experienced radio/TV technician for help.

III. EMI/RFI

The rapid development of electronics, especially in the area of communications, has saturated our environment with electromagnetic (radio) waves that are emitted by television transmitters, cellular phones, citizen's band radios (CBs) amateur radios (HAM radios), wireless computer links, microwave transmitters, paging transmitters, etc. These electromagnetic (EM) waves are invisible and increase in strength the closer one gets to the source of transmission. When these energy waves act upon electrical devices and cause them to malfunction or to function in an erratic or uncontrolled manner, they are referred to as Electromagnetic Interference (EMI) or Radio Frequency Interference (RFI).

EMI/RFI AND YOUR Stride™

All electrically powered vehicles, including power chairs are susceptible to EMI/RFI. This interference could result in abnormal or unintended movement of your Golden Stride™.

WARNING Unintended movement or brake release could cause an accident or injury.

The FDA has determined that each make and model of power chair can resist EMI/RFI to a certain level. The higher the level of immunity, the greater the degree of protection from EMI/RFI measured in volts per meter (V/m). The FDA has also determined that current technology is capable of providing 20 V/m of immunity to EMI/RFI, which would provide useful protection against common sources of interference. This product has been tested and has passed an immunity level of 20 V/m.

EMI/RFI RECOMMENDATIONS

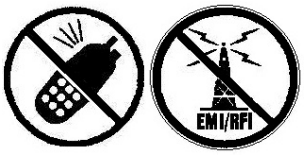

PROHIBITED! Do not turn on or use hand-held personal electronic communication devices such as cellular phones, walkie-talkies, or CB radios while your power chair is turned on.

- Be aware of any nearby transmitters (radio, television, microwave, etc.) on your intended route and avoid operation your of power chair close to any of those transmitters.
- Turn off the power if your Stride™ is going to be in a stationary position for any length of time.
- Be aware that adding accessories or components or modifying your power chair may make it more susceptible to EMI/RFI.
- If unintended movement or brake release occurs, turn your power chair off as soon as it is safe to do so.
- Report all incidents of unintended movement or brake failure to your Golden Technologies representative or to Golden Technologies.

WARNING Turn off your power chair as soon as it is safely possible if unintended or uncontrollable motion occurs or if unintended brake release occurs.

IV. TECHNICAL SPECIFICATIONS

Model Number	**GP301**
Medicare Code	None
Weight Capacity	300 lbs.
Drive Wheels	Rear
Maximum Speed	3.7 mph
Operating Range [1]	9.3 mi.
Ground Clearance	1.6″
Turning Radius	23.6″
Type Batteries	24V 10AH Lithium-ion battery pack
Colors	Black
Freewheel Mode	Yes
Electronic Speed Control	Yes
Electro-Mechanical Brakes	Yes
Charger	2 AMP Off board
Controller	50 AMP
Motor	24V/200W*2
Length	42.5″, folded-15.7″
Width	24.4″, folded-24.4″
Height (ground to top of back of seat)	38.6″, folded-32.7″
Ground to top of Seat	22″
Footrest to top of Seat	15.7″
Seat to top of Arm	9.1″
Front of Armrest to Backrest	14.6″
Weight of Unit: (assembled)	58 lbs.
Batteries	3.8 lbs. (pack)
Tires:	Flat Free
Drive Wheels (rear)	12″
Casters (front)	8″
Rear Anti-tip Wheels	2″
Seat:	Sling Back with Removable Seat Cushion
Back Height	16″
Seat Width	17″
Seat Depth	18″
Color	Black and Grey Two Tone
Footrest:	Folding
Warranty:	
Frame	5 Years
Drive Train	13 Months
Electronics [2]	13 Months
Batteries	12 Months

1. Battery range at 200 lbs., and will vary due to rider weight, drive surface, terrain, and battery type.
2. Electronics warranty excludes batteries.

V. MAIN COMPONEMTS

Main Components

1. Frame (Folding)
2. Footplate (Folding)
3. Push Handle
4. Battery Pack (Lithium-Ion)
5. Seat Cushions
6. Back Cushion with Storage Pouch
7. Arm Assembly (2)
8. Joystick
9. Storage Bag (Under-the-Seat)
10. Caster Wheels (2)
11. Drive Wheels (2)
12. Adjustable Anti-Tip Wheels (2)
13. Lap Belt
14. Freewheel Lever (2)
15. Off-board Charger (Not Shown)
16. Safety Flag (Not Shown)
17. Velcro Strap (Not Shown)

Figure 1

VI. ASSEMBLY AND FOLDING YOUR Stride™

Your Stride™ is shipped partially disassembled in order to maximize the protection of all its parts during the shipping process. Please follow the instructions below to quickly and easily assemble the power chair for your use.

WARNING If you do not feel capable of safely assembling your power chair, please contact your local Golden Technologies, Inc. representative or retailer.

VI. ASSEMBLY AND FOLDING YOUR Stride™

Before assembling your Stride™, be sure to connect the battery harness located behind the battery pack.Your Stride™ will not power up or operate without completing this step. See figure 2.

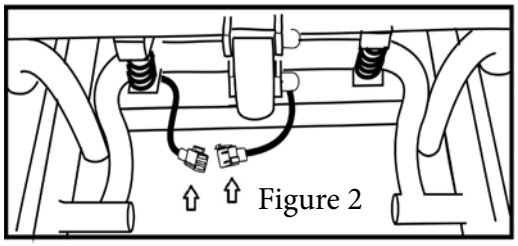

WARNING The Stride™ weighs approximately 55 pounds. Please ask for help if you do not feel capable of safely lifting that much weight.

To Assemble:

With the unit in the folded standing position, follow the steps below.

1. Move the footrest to allow access to the battery pack slot.

2. Align the battery pack with the rail under the seat. While pressing the battery pack latch, slide it forward until it stops. Release the latch to lock the battery pack. See figure 3.

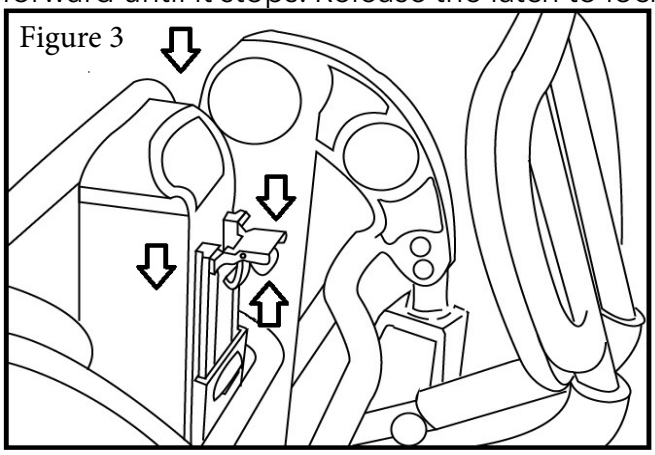

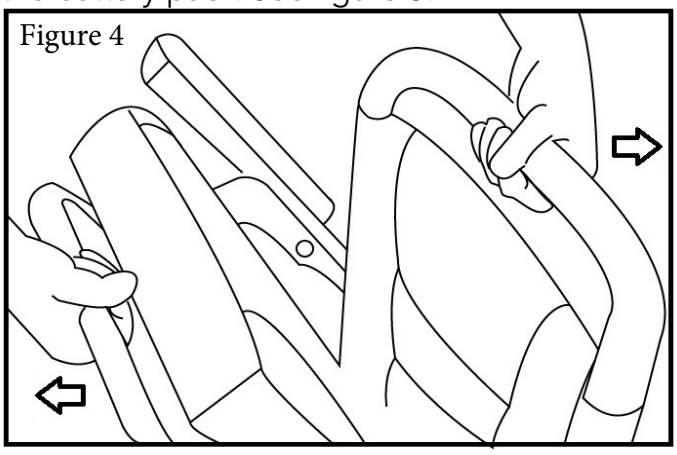

3. With one hand on the backrest push handle and the other hand on the seat tube, pull in opposite directions to unfold the power wheelchair. Note: An audible "click" indicates the latch has engaged and is now in the locked position. See figure 4.

WARNING Pinch points exist, so your hand placement is critical. Injury can occur if you do not follow the hand placement recommedation in step 3 above.

4. Loosen the armrest knob, insert the joystick and adjust to a length comfortable to you, then tighten the knob to secure the joystick. (Note: The joystick may be installed on the left or right arm according to your preference). See figure 5.

WARNING Be sure the joystick cable is securely attached to the unit and that the cable is not able to trail on the ground or become entangled on any surrounding objects while the unit is in use.

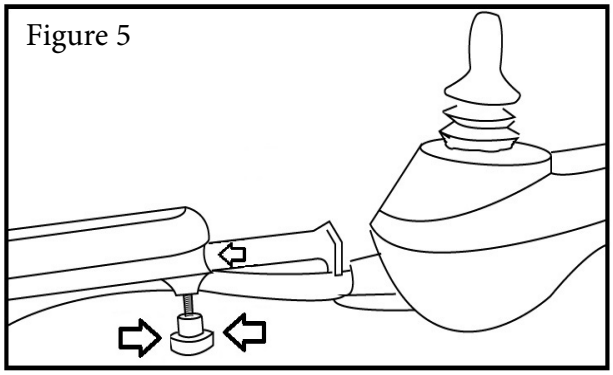

VI. ASSEMBLY AND FOLDING YOUR Stride™

5. Press the latch for one of the anti-tip brackets, which are located at the inside of the rear wheels under the motors. Fully extend the ant-tip until it locks into place. See figure 6. Repeat step 5 for the opposite anti-tip.

WARNING The two anti-tip brackets must be fully extended and locked. Failure to comply can result in the power wheelchair tipping over and serious injury to you and others near you.

6. Place the two freewheel levers into the drive position. Note: The power wheelchair will not drive in freewheel. See figure 7.

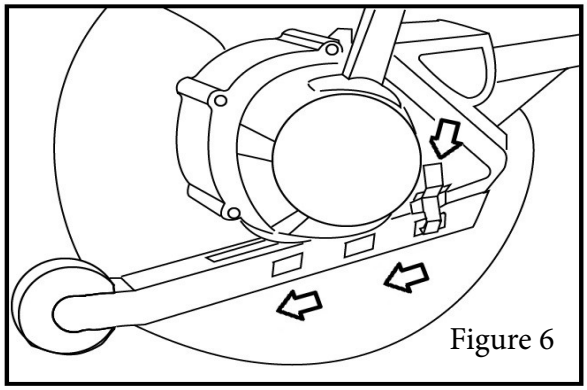
Figure 6

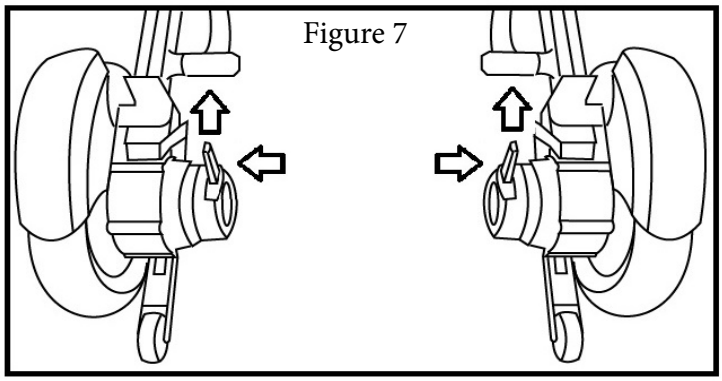
Figure 7

The power wheelchair can be folded to reduce the volume for transportation or storage.

To Fold:

1. Power off the wheelchair.

2. Place the two freewheel levers in the the forward or drive position. See figure 6.

3. Push down on the backrest, pull up the latch see figure 8; fold the wheelchair with one hand pushing the backrest and the other hand on the seat tube. See figure 3.

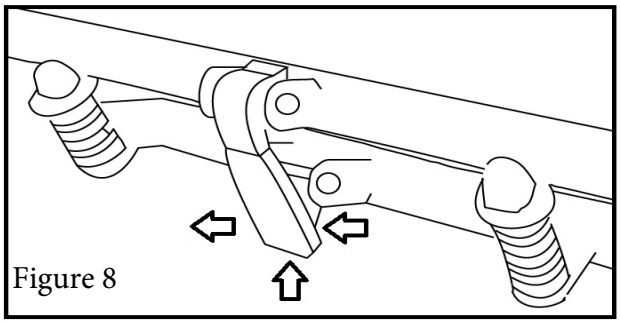
Figure 8

WARNING The two anti-tip brackets must be fully extended and locked to allow the power wheelchair to stand while in the folded position. Failure to comply will cause the power wheelchair to tip and fall over. This may result in serious injury to you and others near you.

4. Flip up the footrest. See figure 9.

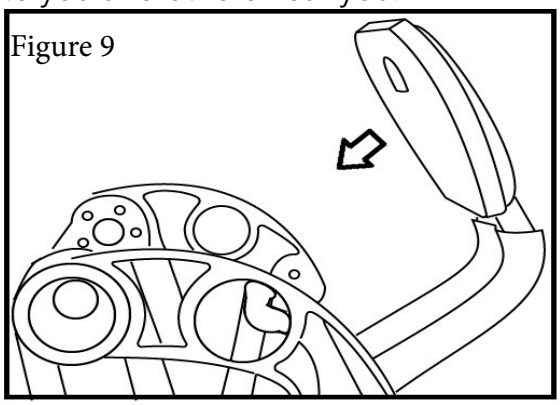
Figure 9

VII. OPERATION

Read and follow the owner's manual.

Your Stride™ is simple to operate. However, for your safety and the safety of others, Golden Technologies, Inc. recommends that you carefully read and understand the following operating instructions. We also recommend that you practice operating your Stride™ in an area free of any obstacles. Once you have gained confidence in your ability to control your power wheelchair, you will more easily be able to operate it in normal daily conditions.

CAUTION Before driving your Stride™, take note of your environment and set your speed control accordingly. See figure 10. For indoor driving, we recommend that you select the lowest speed setting. For outdoor driving, we recommend that you select a speed setting at which you feel comfortable, safe, and in control of your powerwheelchair. Familiarize yourself with the features of your Stride™ described below and follow the instructions to safely operate your power wheelchair.

WARNING The surface of the joystick can potentially get hot when it is exposed to strong sunlight for long periods.

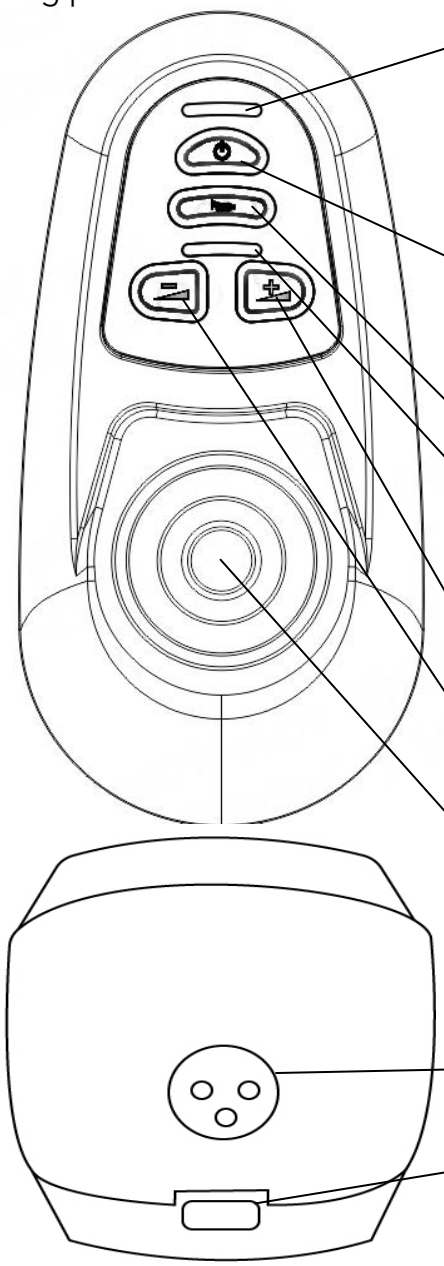

Controller Features

Battery Gauge: This gauge will display 5 (1 red, 2 yellow, and 2 green) LED lights when fully charged. The color and number of illuminated LED lights is a direct indication of your batteries charge. GREEN indicates a good charge staus, YELLOW indicates a caution status, and RED indicates a charge is required for your power wheelchair to continue to operate.

Power Button: This switch supplies power to the control system. Use this switch to turn your power wheelchair on and off under normal circumstances. Do not use the power button to STOP the power wheelchair unless an EMERGENCY situation occurs.

Horn Button: The horn will sound when you press this button.

Speed Setting LED Array: This array indicates the current maximum speed setting of your power wheelchair. This speed setting can be adjusted through the speed up button or speed down button by the user.

Speed Up Button: Pressing this button will increase the maximum speed setting of your power wheelchair.

Speed Down Button: Pressing this button will decrease the maximum speed setting of your power wheelchair.

Joystick: The joystick is used to control the power wheelchair's movement including its speed and direction. The further you move the joystick from its center position, the faster the power wheelchair moves. Whenever you release the joystick, it will automatically return to the center position and the brake will engage to stop the power wheelchair.

Charger Socket: Located at the front of the controller used to charge the batteries by connecting only the supplied battery charger.

USB Port: Located at the front of the controller used to charge smart devices such as phones or tablets.

Figure 10

VII. OPERATION

BATTERY PACK AND CHARGING

Battery maintenance is the most important part of maintaining your power wheelchair. Keeping the battery pack fully charged helps to extend battery life. Use the following guidelines to help keep your battery pack in optimum condition.

IMPORTANT! Fully charge the battery pack prior to its initial use. This brings the battery pack up to about 90 percent of its peak performance level. After each use, charge the battery pack 5-8 hours. After approximately four or five charging cycles, the battery pack will reach 100 percent charge and last for an extend period.

- For daily use, keep batteries fully charged. We recommend that you plug in the off-board charger after each use and charge 5-8 hours.
- If you are not going to use the power wheelchair for more than a week, fully charge the battery pack and then remove it from the power wheelchair.

WARNING Use only the off-board charger supplied for all charging. The use of any other charger can cause a dangerous situation resulting in personal injury, injury to others, and property damage.

CHARGING THE BATTERY PACK

Your Stride™ charging system is designed for your safety and for your convenience. Follow the steps below to recharge the battery pack.

To Charge:

1. Position your Stride™ close to a standard wall electrical outlet.

2. Turn off the power on the joystick and place the power wheelchair in the drive mode.

WARNING The charger should not be plugged into the electrical outlet or powered up at this point in the process. Please check before proceeding.

3. Insert the matching charger plug into the controller's charging socket that is located at the front of the controller or alternatively into the battery pack. See figures 11 and 12.
Note: The alternative battery pack charging method requires removing the battery pack from the power wheelchair prior to charging.

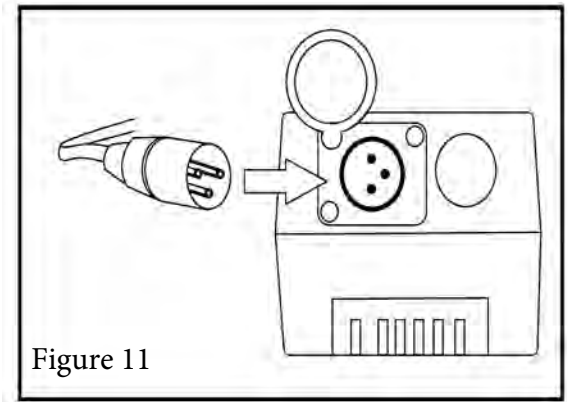

Figure 11

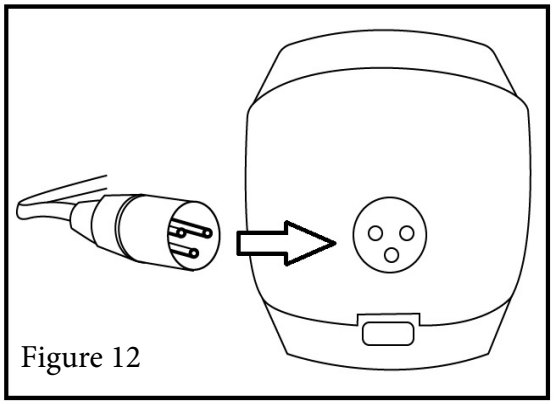

Figure 12

VII. OPERATION

WARNING Failure to align and/or insert the plug in the correct orientation may damage the controller and render your power wheelchair non-operational.

4. Insert the plug at the other end of the charger power cord into a standard electrical wall outlet. The LED light on the charger will illuminate BLUE while charging, and GREEN when fully charged.

Note: The battery gauge will indicate the system is being charged by cycling between a left-to-right light sequence, and then display the approximate battery charge state at the end of the sequence. Driving is prevented (inhibited) while the system is being charged. The system does not have to be powered up when charging the battery, however, if it is not powered up, then the battery gauge will not display the charging state/light sequence.

5. Disconnect the charger power cord from the wall outlet and from the controller charger socket or the battery pack for (alternative charging method) when the batteries are fully charg ed.

RIDING YOUR Stride™

Your Stride™ is simple to operate. However, for your safety and the safety of others, Golden Technologies, Inc. recommends that you carefully read and understand the following operating instructions. We also recommend that you practice operating your Stride™ in an area free of any obstacles. Once you have gained confidence in your ability to control your power wheelchair, you will more easily be able to operate it in normal daily conditions.

WARNING Always shut down the power by pressing the power button on the controller prior to getting into or out of the power wheelchair. Failure to comply may result in inadvertent activation of the joystick, causing the power wheelchair to move and possible injury to you and/or others around you.

WARNING Always make sure the freewheel levers are in the “DRIVE” position prior to getting into or out of the power wheelchair. Failure to comply can cause the power wheelchair to move resulting in an injury.

To Drive:

1. Make sure the power wheelchair is in the “OFF” position.
2. Make sure the two freewheel levers are in the “DRIVE” position.
3. Lift the footrest up.

WARNING Never stand on the footrest or use the footrest as an aide to get on the power wheel chair. Using the footrest in is manor can cause instability resulting in an injury.

VII. OPERATION

4. Unfasten the seat belt (if not already unfastened) to clear the seating surface.
5. While standing next to the power wheelchair, press the RED release button under the corresponding arm and lift the arm up and out of your way.
See figure 13.
6. Carefully seat yourself comfortably and securely on the seat.
7. Fasten the seat belt.
8. Push the arm down until it locks in place. Note: An audible click can be heard when the arm locks in place.
9. Press the power button on the controller. The horn will beep once then the battery gauge will light up .
10. Select your speed by pressing either speed button.

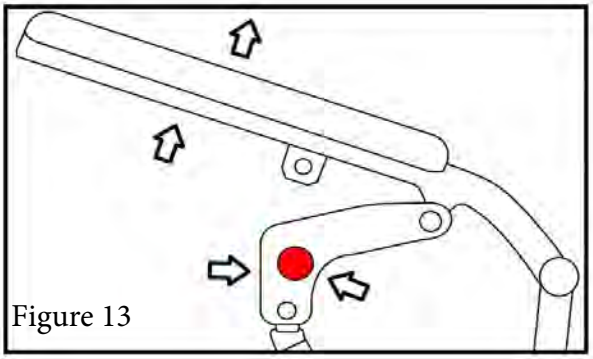
Figure 13

WARNING If you are unsure of yourself start out on the lowest speed setting.

11. Operate the power wheelchair's movement via the joystick. See figure 14.

WARNING The further you move the joystick from its center position, the faster the power wheelchair moves.

Getting OFF your Stride™

1. Stop the power wheelchair completely.
2. Press the power button to turn it off.
3. Press the RED release button under the corresponding arm and lift the arm up and out of your way.
4. Unfasten the seat belt.
5. Lift the footrest up.
6. Carefully stand and step away from the power wheelchair.

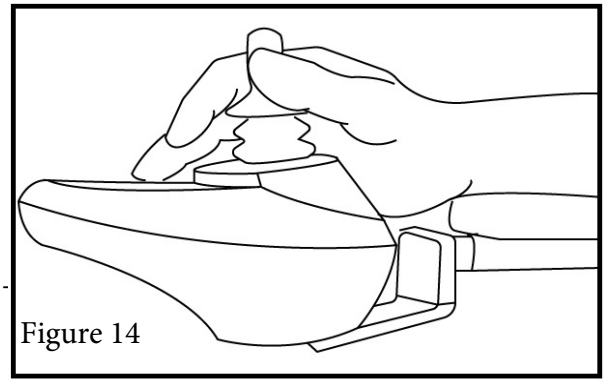
Figure 14

VII. OPERATION

CONTROL THROUGH TIGHT SPOTS

As you use your Stride™ to increase your mobility, you will undoubtedly encounter some obstacles that will require practice to negotiate smoothly and safely. Below are some common obstacles that you may meet during the daily use of your power wheelchair. Listed with those obstacles are some driving tips that should help you conquer those obstacles. Learn and follow those tips, and with surprising ease you will soon be in control of your power chair as you maneuver it through doors, up and down ramps, up and over curbs, through grass and gravel, and up and down inclines.

Doors

- Approach any unfamiliar door slowly.
- Notice if the door has a door knob or a push bar.
- Determine if the door opens towards you or away from you.
- Do not try to use your own strength to open the door. Learn to use the power of your power wheelchair to do the majority of the work for you.

If the door opens away from you:

1. Use one hand to turn the door knob or to operate the push bar.
2. Use your other hand to control the power chair by gently operating the joystick to move your power wheelchair slowly forward.
3. Use your arm to push the door gently open.
4. Drive through the doorway.
5. If it is a self-closing door, it will close behind you.
6. If it is not a self-closing door, stop your power chair when it is clear of the door and use your hand to push the door closed.

If the door opens towards you:

1. Use one hand to turn the door knob or to pull the handle.
2. Keep your grip on the door knob or on the handle.
3. Use your other hand to control the power wheelchair by gently operating the joystick to move your
power chair slowly backward.
4. Allow the power of your Stride™ to pull the door completely open.
5. When the door is completely open, stop your power wheelchair.
6. Drive through the doorway while keeping your hand on the door to prevent it from hitting or blocking your power wheelchair.
7. If it is a self-closing door, it will close behind you. If it is not a self-closing door, pull it closed behind you.
8. If it is not a self-closing door, pull it closed behind you.

Ramps

Because of the American Disabilities Act (ADA), many buildings are fitted with ramps that provide access for power wheelchairs and for other mobility vehicles.

Please read and thoroughly understand “Safety Rules” and “Driving On An Incline” sections of this manual.

VIII. FAULT DIAGNOSIS AND TROUBLESHOOTING

For your convenience, the Stride™ has an automatic fault warning system. If, when powered up, there is a fault with the system, then a corresponding alarm will be sounded by the horn. The horn will beep twice signaling a fault has occurred, followed by the number of beeps indicating the type of fault. These are described in the table below.

BEEP CODE	FAULT DIAGNOSIS	TROUBLESHOOTING
1 Beep	Joystick/Controller Connection	Check the controller connection. Check the harness for damage.
2 Beeps	Right Motor Fault	Check the right motor and wiring harness.
3 Beeps	Right Brake Fault	Make sure the right brake lever is in the "DRIVE" position. Check the right brake and harness for physical damage.
4 Beeps	Left Motor Fault	Check the left motor and wiring harness.
5 Beeps	Left Brake Fault	Make sure the left brake lever is in the "DRIVE" position. Check the left brake and harness for physical damage.
6 Beeps	Controller Overcurrent	Make sure both left and right brakes release and engage, when operating the power wheelchair. Exceeding the maximum weight capacity (265 lbs.) or the maximum incline of 6 degrees. Turn off the controller and let it cool down. Reduce the weight and/or degree of incline while operating the power wheelchair.
7 Beeps	Joystick Fault	Make sure the joystick returns to the center position when released.
8 Beeps	Controller Fault	Failure of the controller itself. Contact your local Golden Technologies, Inc. representative or retailer.
9 Beeps	Low Voltage, Under Voltage	Charge the battery pack. Replace the battery pack if it will not charge or hold a charge.

IX. CARE AND MAINTENANCE

ROUTINE MAINTENANCE

Your power wheelchair requires a minimal amount of care and maintenance. If you do not feel confident in your ability to perform the maintenance listed below, you can schedule an inspection and maintenance with your retailer.

- Make sure your battery pack is fully charged daily. See "Battery Charging".
- While turned off, check the joystick control daily for damage, and make sure it returns to the neutral position. If any defects are observed, contact your retailer. Do not attempt to repair it yourself!
- Inspect the seating system, arms, and footplate daily for loose hardware, excessive wear, or damage. If any defects are observed, contact your retailer.
- Regularly inspect your power wheelchair's tires for signs of wear.
- Regularly inspect all exposed harnessing and connections for wear, damage, and corrosion. Have your retailer repair or replace any damaged harnesses or connectors.
- Keep the electrical components (charger and joystick control) free from moisture. If these items do become exposed to moisture, let them dry thoroughly before attempting to operate your power wheelchair again.
- Periodically check all fasteners for tightness, wear, and corrosion. If any of these are present, turn off the power wheelchair and contact your retailer.

WARNING Be careful of pinch points and sharp metal parts (wear gloves).

- All wheel bearings are permanently lubricated and sealed. No additional lubrication is required.

We recommend that you check the following:

Tire Tread: Regularly visually inspect the tire tread. If the remaining tread is less than 1/32 of an inch, have your local Golden retailer replace the worn tires.

Joystick Control: Protect the joystick control from adverse weather conditions. Moisture can damage the controller and void your power wheelchair's warranty.

Cleaning: Clean the body of your power wheelchair with a damp cloth. Use a cool water mixed with a mild soap to remove dirt and oils. Dry with a clean soft cloth. Buff by hand with a soft cloth.

WARNING Do not use free-flowing water to clean your Stride™. Water and extreme temperatures are the main elements that can adversely affect your power wheelchair and its performance.

IX. CARE AND MAINTENANCE

Water, Rain, Sleet, and Snow
Water, in any form, will cause electronic malfunction or corrosion of the electrical components, connections, and the chair frame.

Temperature
Temperature can adversely affect the components and performance of your power wheelchair.

WARNING At extremely low temperatures, the battery pack of your power wheelchair may freeze, preventing your Stride™ from operating. A frozen battery pack can not be safely charged. Do not operate the power wheel chair if this condition exists, as it creates a safety hazard.

WARNING At extremely high temperatures, your power wheelchair may operate at slower speeds due to the controller's thermal rollback feature that is designed to prevent damage to the motors and to the other electrical components of the chair.

Storage
Your Stride™ should be stored in a clean indoor enviroment with an ambient temperature of 32°F - 122°F,
relative humidity ≤80%, with good ventilation.

WARNING Remove the battery pack from the power wheelchair prior to storage. Corrosive chemicals could leak causing property damage.

X.WARRANTY

Consumer Limited Warranty
Power Wheelchairs

Golden Technologies has provided information throughout the owner's manual in regards to proper usage and care of your power wheelchair. Failure to adhere to this information will void the warranty of the power wheelchair, it's parts and the battery pack supplied by Golden Technologies.

The following warranty is granted only to the INITIAL Consumer who has purchased our product and commences on the Date of Purchase by the Consumer from an Authorized Golden Technologies' Retailer. The Consumer must have a warranty registration card filed with Golden Technologies to receive service.

The warranty covers the following power wheelchair models unless otherwise noted:

- Stride™ GP301

Five-Year Limited Warranty:
For the period of five years from the date of purchase, in the event of defective materials or workmanship, Golden Technologies will repair or replace at our option any of the following structural frame components found to be defective by an authorized Golden Technologies representative:

- Metal Frame*
- Frame Welds*

Thirteen Month Limited Warranty
For the period of thirteen months from the date of purchase, in the event of defective materials or workmanship, Golden Technologies will repair or replace at our option any of the following structural frame components found to be defective by an authorized Golden Technologies representative:

- Caster Beam
- Anti-Tip Forks
- Caster Forks
- Armrests
- Footrest

For the period of thirteen months from the date of purchase, in the event of defective materials or workmanship, Golden Technologies will repair or replace at our option any of the following drive train components found to be defective by an authorized Golden Technologies representative:

- Motor/Gearbox Assembly
- Brake Assembly (electrical function only)

Note: An increase in operating noise of the motor/gearbox DOES NOT constitute a defect. With normal wear and tear, operating noise is expected to increase.

For the period of thirteen months from the date of purchase, in the event of defective materials or workmanship, Golden Technologies will repair or replace at our option any of the following electronic assemblies found to be defective by an authorized Golden Technologies representative:

- Electronic Controller
- Battery Charger
- Wire Harness(es) (excludes boot covers)

Note: While charging batteries, it is normal for the battery charger to heat up. Heat coming from the battery charger DOES NOT constitute a defect.

For the period of thirteen months from the date of purchase, in the event of defective materials or workmanship, Golden Technologies will repair or replace at our option any of the following parts found to be defective by an authorized Golden Technologies representative:

- Bearings
- Bushings
- Rubber Components (excludes tires and all wear parts)
- Plastic Components (excludes body & all wear parts)

Twelve Month Limited Warranty
For the period of twelve months from the date of purchase, in the event of defective materials or workmanship, Golden Technologies will replace the batteries supplied by Golden Technologies if found to be defective by an authorized Golden Technologies representative.

01.26.2022

X. WARRANTY

Consumer Limited Warranty
Power Wheelchair (continued)

Items not mentioned or listed are covered at the discretion of Golden Technologies. Any accessories, standard or optional, supplied by Golden Technologies, are covered for a period of one year from the date of purchase with the particular unit.

Warranty Exclusions:

Golden Technologies does not provide warranty on any of the following items which may require replacement due to the normal wear and tear of day to day usage:

- Tires and Tubes
- Bulbs/Fuses
- ABS Plastic Shrouds
- Battery Cases
- Armrest Pads
- Brake Pads
- Motor Brushes
- Upholstery

This warranty also excludes the following:

- Loss or theft of components
- Damage caused by:
  - Battery fluid spillage or leakage.
  - Abuse, misuse, accident or negligence.
  - Improper operation, maintenance or storage.
  - Commercial use or use other than normal.
  - Repairs and/or modifications made to any part without the specific consent of Golden Technologies.
  - Exceeding the specified weight capacity of the unit.
  - Accessories other than those supplied or approved by Golden Technologies.
  - Failure to adhere to the product instructions.
  - Acts of Nature, such as lightning strikes, earthquakes, etc….
  - Circumstances beyond the control of Golden Technologies.

- **ANY PARTS ALTERED OR REPAIRED BY UNAUTHORIZED PERSON.**

Warranty Service:
Warranty Service must be performed by an authorized Golden Technologies representative. Golden Technologies reserves the right to replace warranted part(s) with refurbished or new part(s) at our discretion. All labor charges, service calls, transportation costs or any other charge(s) associated with the installation of any warranted part(s) are the responsibility of the consumer.
Warranty is for the replacement of the parts only and does not include freight for the replacement parts. Consumers are not to return any item(s) to Golden Technologies without prior written authorization. Any damages incurred while warranted part(s) are in transport are the sole responsibility of the consumer.

There is no other express warranty.

Implied warranties, including those of merchantability and fitness for a particular purpose are excluded. Liabilities for consequential damages are excluded.

This warranty gives you specific rights and you may also have other rights which may vary from state to state.

01.26.2022

GOLDEN PRODUCT REGISTRATION

Register Now ***To Lock In Your Warranty*** and Receive Important Product Updates

SAVE TIME - REGISTER ONLINE: WWW.GOLDENTECH.COM

SERIAL NUMBER

Most Lift Chairs Have On Controller Wire or Back Rail of the Metal Frame
Most Scooters & Powerchairs On Seat Post, Under/On Battery, or Under Carpet

PRODUCT MODEL NUMBER

Most Lift Chairs Start with PR (PR401, PR510, etc).
Most Scooters with G (GA, GB, GC, GL, GR, etc) Most Powerchairs with GP

PURCHASE DATE __ __ — __ __ — __ __ __ __

FIRST NAME

LAST NAME

ADDRESS

ADDRESS LINE 2

CITY

STATE / PROVINCE

ZIP / POSTAL CODE

E-MAIL ADDRESS

PROVIDER NAME

PROVIDER`S ADDRESS

ADDRESS LINE 2

CITY

STATE / PROVINCE

ZIP / POSTAL CODE

COUNTRY

SAVE TIME!

Register your product Online. Visit goldentech.com or scan this QR code!

Product comments:

Rate Provider Experience (Circle One - 1 Bad, 5 Great)

1 2 3 4 5

Fold Here First

Place
Stamp
Here

Golden Technologies
401 Bridge Street
Old Forge, PA 18518

Fold Here Second

GOLDEN Stride

Model GP301

GOLDEN

401 Bridge Street
Old Forge, PA 18518
Tel: 800-624-6374
Fax: 800-628-5165
www.goldentech.com