Lift Chair
Service Guide

PROUDLY MADE BY AMERICANS
with Domestic & Imported Materials

This Service Guide contains:
Troubleshooting
Replacement Instructions
Electrical Systems
Parts Lists

DISCLAIMER

Golden Technologies, Inc. reserves the right to implement changes into our product lines when those changes become desirable or necessary. If changes are implemented into our product line, there may be minor differences between the product you have and the illustrations and instructions in this owner's manual.

Contact Golden Technologies, Inc. Technical Support Services to place a parts order. Please have the model and serial number of the lift chair your are servicing, prior to placing a call or parts order.

Contact Information:
Golden Technologies
401 Bridge Street
Old Forge, PA 18518

Toll-free: 800-624-6374
Fax: 800-628-5165

Lift Chair/Bed Tech: x502
Mobility Tech: x501
VA Tech: x505

Email: parts@goldentech.com

Table of Contents

About the Lift Chair Service Guide....4
Lift Chair Components....4-6
General Trouble Shooting and Tools Required....7
Models Quick Reference....8-9

Replacement Instructions....10-22

Smart Tek® Hand Control....10
Hand Control Extension....10
Back Assembly....11
Control Box....11
Lift Motor....11
Lift Frame....12
Arm Assembly....13-14
Scissor Mechanism....14-15
Recline Bar....15-16
Seat Assembly....16-17
Recline Straps....17
Fork Head....18
Spacer Bar....19-20
Head Rest Motor....21
Head Pillow....22
Scissor Mechanism Parts....23
OKIN Lift Motor Comparison....24
Richmat Motor Comparison....25

Electrical Systems....26-37
Heat and Massage....38-45

Trouble Shooting with Smart Tek®....46

Lift Frames....47-72

PR502 Scissor Mechanism Replacement....73
MaxiComfort Recline Mechanism....74
Power Connections....75
Back Installation....76
MaxiComfort Back Installation....77
MaxiComfort Back Installation Model PR505-M26....78
Hand Controls....79-84
AutoFlex Wiring Diagram....85
Shiatsu Component Replacement....86-87
Shiatsu Wiring Diagram....88
PR404 Hand Control and Wiring....89
Footrest Installation....90-91
Grease Points....92-93
Lift Chair Cut Away....94
Lift Chair Boxing Instructions....95-96

About the Lift Chair Service Guide

This service guide provides you with the information necessary to repair Golden Technologies 3-position, 2-position, Independent, and MaxiComfort recline lift chairs. The troubleshooting scenarios in this manual consist of procedures that enable you to systematically trace and correct faults in the system, replacement procedures, and exploded views of available parts. Most replacement instructions apply to all the lift chairs in this service manual, but some of them are specific to individual chairs.

Before troubleshooting, check the following:

- Make sure that the lift chair is plugged into a working wall outlet.
- Check the wall outlet circuit breaker.
- Visually check terminals for corrosion.
- Check wires for missing insulation.
- Check connectors for unseated pins.
- Ensure LED lights are on. (Refer to “Trouble Shooting with Smart Tek®” on page 46).

Information required prior to making a service call:

- Serial Number
- Date of Purchase
- Description of the problem with the lift chair

Lift Chair Components

Lift chairs are powered by 24V DC transformers that plug into standard wall outlets and operate on standard 120V AC electricity. The lift chair control system is made up of the following components:

- Motor(s)
- Hand Control
- Extension Wire
- Transformer
- Battery Backup Wire*
- Heat Unit*
- Massage Unit*
- Control Unit*
- Junction Box*

* Only on Selected Models

Component: Motor
Location: Between the lift frame and the seat.
Function: Provides lift and recline.
Connections: Each motor is physically connected to the chair through the lift frame and the motor straps. Each motor is electrically connected to either a control unit or directly to the hand control.
Failure Signs: Chair will not lift and/or recline. Motor may become noisy just before failure.
Tests: See “Trouble Shooting with Smart Tek®” on page 46.
Expected Readings: See “Trouble Shooting with Smart Tek®” on page 46.
Serviceable: Must be replaced.

Component: Hand Control (Lift/Recline or Recline Only)
Location: On the arm of the chair.
Function: Provides user interface for lift/recline or recline only.
Connections: Connected to either the control unit or the motor.
Failure Signs: Chair will not lift and/or recline.
Tests: See “Trouble Shooting with Smart Tek®” on page 46.
Expected Readings: See “Trouble Shooting with Smart Tek®” on page 46.
Serviceable: Must be replaced.

Component: Extension Wire
Location: Between the lift frame and the chair frame.
Function: Provides connection from the hand control to the motor or control box.
Connections: From the quick disconnect in the pocket to the motor or control box.
Failure Signs: Chair will not lift/recline.
Tests: Test continuity.
Expected Readings: Open Circuit.
Serviceable: Must be replaced.
Component: Transformer
Location: Next to chair.

WARNING **Do not place the transformer under the lift chair.**
Function: Converts AC to DC. Also provides power during a power failure.
Note: Power during a power failure only applies to the lift/recline or recline only functions.
Connections: Wall outlet and either control box or motor.
Failure Signs: Chair will not operate.
Tests: Test for voltage at connection to chair.
Expected Readings: Approximately 27VDC.
Serviceable: Must be replaced.

Component: Control Box (500 lb. and 700 lb. chairs only)
Location: On the lift frame.
Function: Provides connectivity for motors, hand control, and transformer.
Connections: Connected to the motor(s), hand control, and transformer.
Failure Signs: Chair will not lift and/or recline. Clicking noise. Motors out of sync.
Tests: DC Voltage
Expected Readings: 27 - 32 VDC. See figure 1.
Serviceable: Must be replaced.

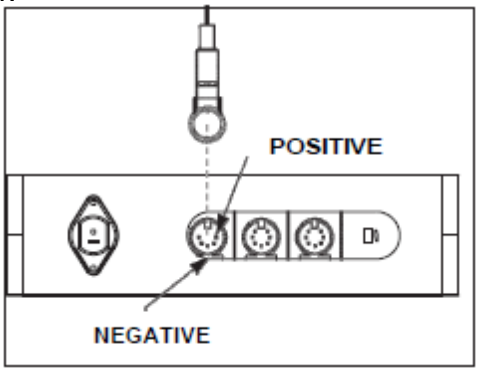

Component: Heat Pad
Location: Lumbar area of the back.
Function: Provides heat.
Connections: Connected to the control box.
Failure Signs: No heat.
Tests: Resistance.
Expected Readings: Approximately, 40 ohms across the two connector pins.
Serviceable: Must be replaced.

Component: Massage Unit
Location: On the seatback or the seat.
Function: Vibrates to provide massage.
Connections: Connected to the junction box.
Failure Signs: Massage will not work when selected.
Tests: Check for DC voltage.
Expected Readings: Approximately 13.8 DC Volts. Approximately, 25 ohms across the two connector pins.
Serviceable: Must be replaced.

Component: Hand Control (Heat/Massage)
Location: On the arm of the chair.
Function: Provides user interface for heat/massage.
Connections: Connected to the control box.
Failure Signs: Heat/Massage will not work.
Tests: See “Hand Controls” on pages 81-82. For a more complete guide, refer to the manufacturer’s owner’s manual.
Expected Readings: See “Hand Controls” on pages 81-82. For a more complete guide, refer to the manufacturer’s owner’s manual.
Serviceable: Must be replaced.

Battery Back Up System
1. Batteries should be replaced after one use.
2. Batteries should be changed yearly.
For a complete explanation of the battery back up system, refer to the owner’s manual.

General Trouble Shooting

Problem: 1
Chair is in the lift position and will not descend, or chair is in the recline position and will not lift.

Solution:
If the chair is stuck in the lift position, press the down button; if the chair is stuck in the recline position, press the up button. While pressing the appropriate button, listen to hear if the motor is running.
Ensure LED lights are on. (Refer to “Trouble Shooting with Smart Tek®” on page 46).

Problem 2
If you don’t hear the motor running, follow these steps.

A) Check to see if the chair is securely plugged in.
B) See if the outlet is activated by a wall switch.
C) Try plugging the chair into a different outlet. (Sometimes the socket is worn and will not handle the amps needed for operation.)
A) Check wiring on both power cord for motor and switch cord for breakage or fraying.
B) Plug the new hand control into motor or into extension and try for chair response.
C) If still no response, see “Trouble Shooting with Smart Tek®” on page 46.

Problem 3
If you hear the motor running, but the chair won’t move or partially moves, check for the following:

A) Inspect lift frame for possible breakage.
B) Inspect push tube or gear casing for breakage.
C) Gears may be stripped in gear casing in motor assembly.
D) Push tube may be stripped or the fork head may be broken.

Tools Required:

The following tools are needed to service ***Golden Technologies*** lift chairs.

- # 8, 9 or 10 flat head screw driver
- P2 & P3 Phillips head screw driver
- T30 torx bit
- Wired or wireless drill

Note: Driver bits can be used to speed up the repair process.
If servicing a lift chair with the MaxiComfort mechanism, you will also need:

- 7/16 & 3/8 ratchet wrench

- Chair stand
- Spare hair pins
- Zip ties
- 7/16 box head wrench
- 3/8 box head wrench
- 1/2 box head wrench
- Needle nose pliers

- 5/32 Allen wrench

- Volt meter
- Clippers or scissors
- Retracto knife
- Spare rags
- Large vice grip
- White lithium grease or Zep 2000

Models Quick Reference

Model	Series	Size	Lift Frame	Recline Bar	Motor	Transformer	Hand Control	Recline Mech.
PR630 PR631 PR632	Maxi Comfort	Medium	LM5120	RB5100-M-1	GM1450-LM GM1450-RM	GM2102-TR-PK	ZK3200-HC	RM622L/R
PR761-MLA	Maxi Comfort	Medium Large	LM5124	RB5100-M-1	GM3100-LM GM3100-RM GM3100-CM	GM2102-TR-PK	ZK3100-C5M	RM622L/R
PR712 PR713	Maxi Comfort	Medium	LM5120	RB5100-M-1	GM1450-LM GM1450-RM	GM2102-TR-PK	ZKAD-5	RM622L/R
PR510-SME	Maxi Comfort	Small Medium	LM5100	RB753-2	GM1450-LM GM1450-RM	GM2102-TR-PK	ZKAD-5	RM622L/R
PR510-MLA	Maxi Comfort	Medium Large	LM5120	RB5100-M-1	GM1450-LM GM1450-RM	GM2102-TR-PK	ZKAD-5	RM622L/R
PR512-MLA	Maxi Comfort	Medium Large	LM5120	RB5100-M-1	GM1450-LM GM1450-RM	GM2102-TR-PK	ZKAD-HR-1	RM622L/R
PR514-MLA	Maxi with Twilight	Medium Large	LM5124	RB5100-M-1	GM1450-C3M GM1450-CM GM1450-RM	GM2102-TR-PK	ZKAD-C3M	RM622L/R
PR515-MLA	Maxi Comfort	Medium Large	LM5124	RB5100-M-1	GM3100-LM GM3100-RM GM3100-CM	GM2102-TR-PK	ZK3100-C5M	RM622L/R
PR713	Maxi Comfort	Medium	LM5120	RB5100-M-1	GM1450-LM GM1450-RM	GM2102-TR-PK	ZKAD-5	RM622L/R
PR735-MLA	Maxi Comfort	Medium Large	LM5120	RB5100-M-1	GM1450-LM GM1450-RM	GM2102-TR-PK	ZKAD-5	RM622L/R
PR756-MED	Maxi Comfort	Medium	LM5120	RB5100-M-1	GM1450-LM GM1450-RM	GM2102-TR-PK	ZKAD-5	RM622L/R
PR756-LAR	Maxi Comfort	Large	LM5120-EXT	RB5100-L23	GM1450-LM GM1450-RM	GM2102-TR-PK	ZKAD-5	RM622L/R
PR766-MED	Maxi Comfort	Medium	LM5100	RB5100-M-1	GM1450-LM GM1450-RM	GM2102-TR-PK	ZKAD-5	RM622L/R
PR508-MED	Maxi Comfort	Medium	LM5100	RB5100-M-1	GM1500-LM GM1450-RM	GM2102-TR-PK	ZKAD-5	RM622L/R
PR535-PSA	Maxi Comfort	Petite Small	LM5100	RB5100-M-1	GM1450-LM GM1450-RM	GM2102-TR-PK	ZKAD-5	RM622L/R
PR535-MED	Maxi Comfort	Medium	LM5100	RB5100-M-1	GM1450-LM GM1450-RM	GM2102-TR-PK	ZKAD-5	RM622L/R
PR535-LAR	Maxi Comfort	Large	LM5120	RB5100-L-1	GM1450-LM GM1450-RM	GM2102-TR-PK	ZKAD-5	RM622L/R
PR535-TAL	Maxi Comfort	Tall	LM5120	RB5100-L-1	GM1450-LM GM1450-RM	GM2102-TR-PK	ZKAD-5	RM622L/R
PR535-M26	Maxi Comfort	Medium Wide	LM6111	RB6111-1	GMOKI-28W GM756R	GM2102-TR-PK	ZK756HCL	RM622L/R
PR535-M28	Maxi Comfort	Medium Wide	LM6112	RB6112-28	GM3100-LM GM3700-RM	GM2102-TR-PK	ZK3700HC	RM622L/R
PR505-JPT	Maxi Comfort	Jr. Petite	LM5100	RB753-2	GM1450-LM GM1450-RM	GM2102-TR-PK	ZKAD-5	RM622L/R
PR505-SMA	Maxi Comfort	Small	LM5100	RB5100-S-1	GM1450-LM GM1450-RM	GM2102-TR-PK	ZKAD-5	RM622L/R
PR505-MED	Maxi Comfort	Medium	LM5100	RB5100-M-1	GM1450-LM GM1450-RM	GM2102-TR-PK	ZKAD-5	RM622L/R
PR505-LAR	Maxi Comfort	Large	LM5120	RB5100-L-1	GM1450-LM GM1450-RM	GM2102-TR-PK	ZKAD-5	RM622L/R
PR505-TAL	Maxi Comfort	Tall	LM5120	RB5100-L-1	GM1450-LM GM1450-RM	GM2102-TR-PK	ZKAD-5	RM622L/R
PR505-M26	Maxi Comfort	Medium Wide	LM6111	RB6111-1	GMOKI-28W GM756R	GM2102-TR-PK	ZK756HCL	RM622L/R

Models Quick Reference

Model	Series	Size	Lift Frame	Recline Bar	Motor	Transformer	Hand Control	Recline Mechs.
PR118-MED	DeLuna	Medium	LM5100	RB5100-M-1	GM1410-LM	GM1410-TR	ZK1200-HC-1	RM631L/R
PR202-MED	DeLuna	Medium	LM5100	RB5100-M-1	GM1410-LM	GM1410-TR	ZK1200-HC-1	RM631L/R
PR446-MED	DeLuna	Medium	LM5120	RB5100-M-1	GM3100-LM GM3100-RM	GM1410-TR	ZK3100-C5M	RM622L/R
PR446-LAR	DeLuna	Large	LM5120	RB5100-L-1	GM3100-LM GM3100-RM	GM1410-TR	ZK3100-C5M	RM622L/R
PR501-JPT	Comforter	Petite	LM5100	RB753-2	GM1410-LM	GM2102-TR-PK	ZK1200-HC-1	RM621L/R
PR501-SMA	Comforter	Small	LM5100	RB5100-S-1	GM1410-LM	GM2102-TR-PK	ZK1200-HC-1	RM621L/R
PR501-MED	Comforter	Medium	LM5100	RB5100-M-1	GM1410-LM	GM2102-TR-PK	ZK1200-HC-1	RM621L/R
PR501-LRG	Comforter	Large	LM5120	RB5100-L-1	GM1410-LM	GM2102-TR-PK	ZK1200-HC-1	RM621L/R
PR501-TAL	Comforter	Tall	LM5120	RB5100-L-1	GM1410-LM	GM2102-TR-PK	ZK1200-HC-1	RM621L/R
PR531-PSA	Comforter	Petite Small	LM5100	RB753-2	GM1410-LM	GM2102-TR-PK	ZK1200-HC-1	RM621L/R
PR531-MED	Comforter	Medium	LM5100	RB5100-M-1	GM1410-LM	GM2102-TR-PK	ZK1200-HC-1	RM621L/R
PR531-LAR	Comforter	Large	LM5120	RB5100-L-1	GM1410-LM	GM2102-TR-PK	ZK1200-HC-1	RM621L/R
PR531-TAL	Comforter	Tall	LM5120	RB5100-L-1	GM1410-LM	GM2102-TR-PK	ZK1200-HC-1	RM621L/R
PR501-S23	Comforter Wide	Small Wide	LM5120	RB5100-L-1	GM1410-LM	GM2102-TR-PK	ZK1200-HC-1	RM621L/R
PR501-M26	Comforter Wide	Medium Wide	LM6111	RB6111-1	GMOKI-28W	GM2102-TR-PK	ZK1200-HC-1	RM621L/R
PR501-LR6	Comforter Wide	Large Wide	LM6111	RB6111-1	GM1410-LM	GM2102-TR-PK	ZK1200-HC-1	RM621L/R
PR501-T28	Comforter Wide	Tall Wide	LM6111	RB6111-1	GMOKI-28W	GM2102-TR-PK	ZK1200-HC-1	RM621L/R
PR502-W33	Comforter Wide	Super Wide	LM502	RB502	GMOKI-28W GMOKI502OM	GM2102-TR-PK	ZK756HCL	RM502L/R
PR531-S23	Comforter Wide	Small Wide	LM5120	RB5100-L-1	GM1410-LM	GM2102-TR-PK	ZK1200-HC-1	RM621L/R
PR531-M26	Comforter Wide	Medium Wide	LM6111	RB6111-1	GMOKI-28W	GM2102-TR-PK	ZK756HCL	RM621L/R
PR531-T28	Comforter Wide	Tall Wide	LM6111	RB6111-28-1	GMOKI-28W	GM2102-TR-PK	ZK1200-HC-1	RM621L/R
PR200-MED	Value	Medium	LM5000C	RB4000-CB	GM1410-LM	GM2102-TR-PK	ZK1200-HC-1	RM8300L/R
PR355-MED	Value	Medium	LM5100	RB5100-M-1	GM1410-LM	GM2102-TR-PK	ZK1200-HC-1	RM621L/R
PR355-LRG	Value	Large	LM5120	RB5100-L-1	GM1410-LM	GM2102-TR-PK	ZK1200-HC-1	RM621L/R
PR401-SME	Signature	Small Medium	LM5100	RB5100-M-1	GM1410-LM	GM2102-TR-PK	ZK1200-HC-1	RM621L/R
PR401-MLA	Signature	Medium Large	LM5120	RB5100-L-1	GM1410-LM	GM2102-TR-PK	ZK1200-HC-1	RM621L/R
PR404	Signature	Medium	LM5100	RB5100-M-1	GM1410-LM	GM2102-TR-PK	ZK404-HC	RM621L/R
PR405-MLA	Signature	Medium Large	LM5124	RB5100-M-1	GM3000-LM GM3000-CM	GM2102-TR-PK	ZK3000-C2P	RM621L/R
PR724-MED	Signature	Medium	LM5100	RB5100-M-1	GM1500-LM	GM2102-TR-PK	ZK1200-HC-1	RM621L/R
PR751	Signature	Medium	LM5120	RB5100-M-1	GM1450-LM	GM2102-TR-PK	ZK1200-HC-1	RM621L/R
PR931-SMA	Signature	Small	LM992N	None	GM1900	GM2102-TR-PK	ZK1200-HC-1	LM992S
PR931-MED	Signature	Medium	LM992S	None	GM1900	GM2102-TR-PK	ZK1200-HC-1	LM992S
PR931-LAR	Signature	Large	LM992S	None	GM1900	GM2102-TR-PK	ZK1200-HC-1	LM992S

Replacement Instructions

Smart Tek® Hand Control Replacement
Tools Needed: None

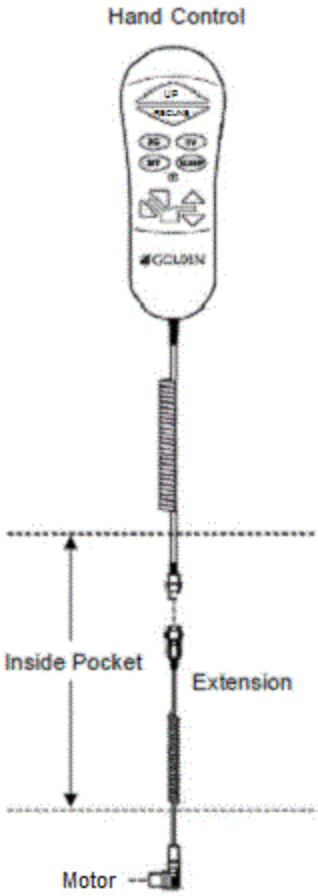

1. WARNING Unplug the transformer from the wall outlet.
2. Reach down into the pocket until you feel the disconnect latch on the extension cable.
3. Pull back on the disconnect latch.
4. Put one hand on the back of the extension wire plug base and one on the hand control plug base and pull the two pieces apart.
5. Plug in the new Smart Tek hand control to the extension cable.
6. Push forward on the disconnect latch. Make sure it engages fully with the hand control plug base.
7. Plug the transformer into the wall outlet and test the hand control.

Hand Control Extension Replacement
Tools Needed: Phillips head screwdriver, wire cutter, staple remover, stapler, zip ties, and a chair stand.

1. WARNING Unplug the transformer from the wall outlet.
2. Reach down into the chair's side pocket until you feel the disconnect latch on the hand control extension.
3. Pull back on the disconnecting latch.
4. Put one hand on the back of the extension wire plug base and one on the hand control plug base and pull the two pieces apart.
5. Gently push the chair over onto the footrest, turn it upside down or, gently push it over onto its side, opposite of the hand control.
6. Use a Phillips screwdriver to remove the wire clamp used to secure the extension cable to the bottom of the armrests. Make sure you save the clamp and screw.
7. Remove a few staples on the arm assembly to allow the extension wire to be pulled out through the fabric pocket.
8. Pull the extension cable through the fabric pocket.
9. Locate the zip ties that hold the extension wire to the lift frame. Note their location.
10. Cut these ties.
11. Unplug the extension cable from the motor or control box on the 500 lb and 700 lb chairs.
12. Plug the new extension cable into the motor or control box on the 500 lb and 700 lb chairs.
13. Secure it to the lift frame with zip ties. Use the same locations as the old extension cable.
14. Insert the extension cable into the fabric pocket.
15. Reinstall the staples that were removed in step 8.
16. Reinstall the wire clamp.
17. Turn the chair back over onto its legs.
18. Plug in the Smart Tek hand control to the extension cable.
19. Push forward on the disconnecting latch. Make sure it engages fully with the hand control plug base.
20. Clip the Smart Tek hand control to the black plastic hook on the side of the chair arm.
21. Plug the transformer back into the wall outlet and test.

Back Assembly Replacement (500-lb. and 3-position)
Tools needed: 7/16 in. socket wrench

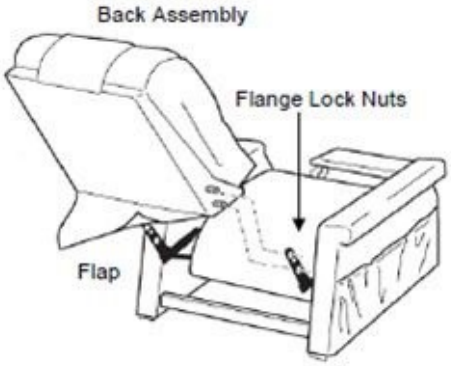

1. Press the Up Button on the hand control until the footrest is about parallel to the floor.
2. WARNING **Unplug the transformer from the wall outlet.**
3. Using the 7/16 in. socket wrench, remove the (2) flange lock nuts located on both sides of the back.
4. Pull the back flap away from the Velcro.
5. Work the back assembly out one side at a time pulling the threaded studs out of the scissor mechanisms.
6. Install new back.

Control Box Replacement (500-lb. only)
Tools needed: Wire cutters, replacement zip ties, and a chair stand.

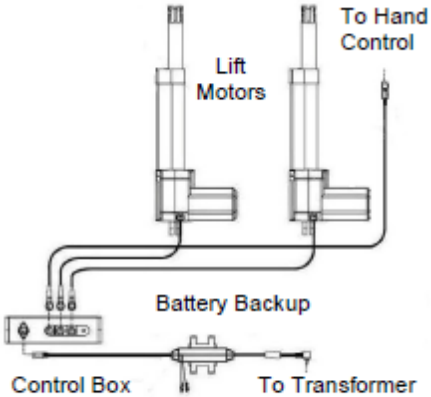

Control Box

1. WARNING **Unplug the transformer from the wall outlet.**
2. Gently push the chair over onto the footrest, turn it upside down or, gently push it over onto its side, opposite of the hand control.
3. Unplug the motor(s), hand control extension, battery backup from the control box.
4. Cut the wire ties that fasten the control box to the lift frame and remove it.
5. Use wire ties to fasten a new control box onto the lift frame.
6. Plug the motor(s), hand control extension, and battery backup into the new control box.
7. Gently turn the chair back over.
8. Plug the transformer into the wall outlet and test.

Lift Motor Replacement
Tools needed: Needle nose pliers, zip ties, and a chair stand.

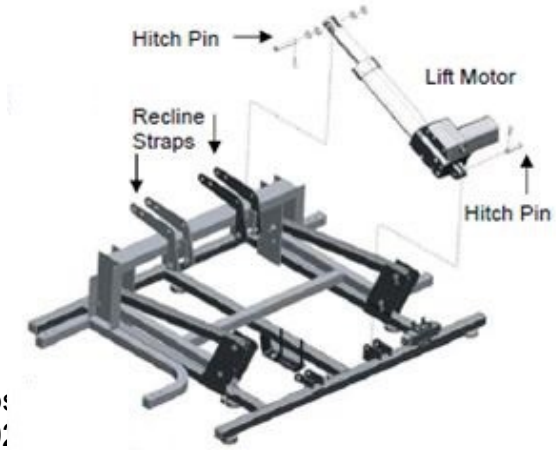

1. WARNING **Unplug the transformer from the wall outlet.**
2. Gently push the chair over onto the footrest, turn it upside down or, gently push it over onto its side, opposite of the hand control.
3. Unplug the motor(s). For (501M26, 501L26, 501T28, 502, 505M26), unplug the motor(s) from the control box.
4. Remove the hitch pin and the clevis pin that fastens the bottom of the motor(s) to the lift frame.
5. Remove the hitch pin, the clevis pin, washers, and spacers that fasten the top of the motor(s) to the recline straps.
6. Use the hitch pin and clevis pin to fasten the bottom of the new motor to the lift frame.
7. Use the hitch pin, clevis pin, washers, and spacers to fasten the top of the lift recline to the recline straps
8. Connect new motor(s). For (501M26, 501L26, 501T28, 50
9. Turn the chair over onto the lift frame.
10. Plug the transformer into the wall outlet and test.

Lift Frame Replacement
Tools needed: Needle nose pliers, T30 Torx screw bit, wire cutters, replacement zip ties, and a chair stand.

1. WARNING **Unplug the transformer from the wall outlet.**
2. Gently push the chair over onto the footrest, turn it upside down or, gently push it over onto its side, opposite of the hand control.
3. Unplug the motor(s), hand control extension, and battery backup from the control box.
4. Cut the wire ties that fasten the control box to the lift frame and remove it (500-lb. and 700 lb. only.)
5. Remove the four (4) T30 lag screws, eight (8) on models (501M26, 501L26, 501T28, 505M26) that hold the lift frame to the arm assembly.
6. Cut the wire ties that hold the hand control extension wire to the frame and place the wire to the side.
7. Remove the hitch pin(s), the clevis pin(s), and washers that fasten the recline strap(s) to the recline bar.
8. Lift the lift frame out of the chair shell.

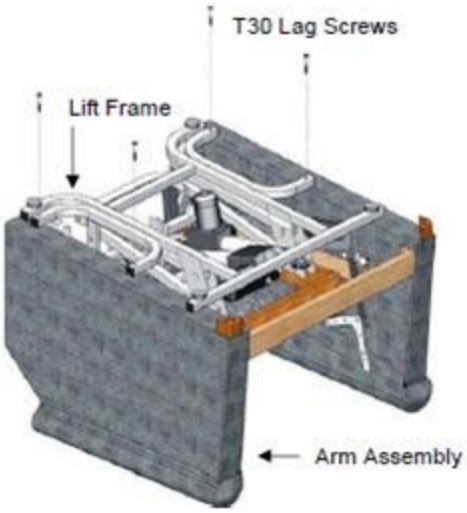

Note: *When installing the new lift frame the footboard must be completely closed when you fasten the lift frame to the armrest assembly or the footboard will not close properly.*

9. Cut the wire ties that fasten the motor cables to the lift frame.
10. Remove the hitch pin(s) and the clevis pin(s) that fasten the bottom of the motor(s) to the lift frame.
11. Remove the hitch pin(s), the clevis pin(s), spacers, and washers that fasten the recline straps(s) to the lift frame.
12. Use the hitch pin(s), the clevis pin(s), spacers, and washers to fasten the recline strap(s) to the new lift frame.
13. Use the hitch pin(s) and the clevis pin(s) to fasten the bottom of the motor(s) to the new lift frame.
14. Place the new lift frame onto the chair shell.
15. Use the hitch pin(s), the clevis pin(s), and the washers to fasten the recline strap(s) to the recline bar.
16. Use the four (4) T30 lag screws, eight (8) on models (501M26, 501L26, 501T28, 505M26) to fasten the lift frame to the arm assembly.
17. Use two wire ties to fasten the hand control extension to the lift frame.
18. Use wire ties to fasten the control box (500-lb. and 700 lb. only) to the lift frame.
19. Plug the motor(s), hand control extension, and battery backup into the control box.
20. Gently push the chair back over.
21. Plug the transformer into a wall outlet and test.

Arm Assembly Replacement
Tools needed: Needle nose pliers, P2 Phillips screwdriver, T30 screw bit, wire cutters, zip ties, 3/8 in. socket, a stool or stand for placing the chair upside down.

1. WARNING **Unplug the transformer from the wall outlet.**
2. Reach down into the chair's side pocket until you feel the disconnect latch on the hand control extension.
3. Pull back on the disconnecting latch.
4. Put one hand on the back of the extension wire plug base and one on the hand control plug base and pull the two pieces apart.
5. Gently push the chair over onto the footrest, turn it upside down or, gently push it over onto its side, opposite of the hand control.
6. Use a Phillips screwdriver to remove the wire clamp used to secure the extension cable to the bottom of the armrests. Make sure you save the clamp and screw.
7. Remove a few staples on the arm assembly to allow the extension wire to be pulled out through the fabric pocket.
8. Pull the extension cable through the fabric pocket.
9. Remove the four (4) T30 lag screws, eight (8) on models (501M26, 501L26, 501T28, 505M26) that hold the lift frame to the arm assembly.
10. Remove the hitch pin(s), clevis pin(s), and washers that fasten the recline strap(s) to the recline bar.
11. Lift the lift frame out of the chair shell and place it off to the side.
12. Use the 3/8 in. socket to remove the two (2) bolts that fasten each scissor mechanism to the arm assembly.

WARNING **While this next step can be done alone, it does require extra attention. You must remove the arm assembly without twisting the frame. Excessive twisting will cause the board holding the arms together to snap.**

13. Stand behind the chair and pull the arms away from the chair being careful not to get the material snagged in the scissor mechanisms.
14. Place the arm assembly to the side.
15. Place the new arm assembly in place so that the bolt holes in the scissor mechanisms line up with the bolt holes in the armrest.
16. Install the two (2) bolts that fasten each scissor mechanisms to the new arm assembly.
17. Make sure the footboard is completely closed.

Note: *When installing the lift frame the footboard must be completely closed when you fasten the lift frame to the armrest assembly or the footboard will not close properly.*

18. Place the lift frame onto the chair shell.
19. Use the hitch pin(s), the clevis pin(s), and the washers to fasten the recline strap(s) to the recline bar.
20. Use the four (4) T30 lag screws, eight (8) on models (501M26, 501L26, 501T28, 505M26) to fasten the lift frame to the arm assembly.
21. Reinstall the staples that were removed in step 8.
22. Reinstall the wire clamp.
23. Gently turn the chair back over onto its legs.

24. Plug in the Smart Tek hand control to the extension cable.
25. Push forward on the disconnecting latch. Make sure it engages fully with the hand control plug base.
26. Clip the Smart Tek® hand control to the black plastic hook on the side of the chair arm.
27. Plug the transformer back into the wall outlet and test.

Scissor Mechanism Replacement
Tools needed: Needle nose pliers, P2 Phillips screwdriver, T30 screw bit, wire cutters, zip ties, 3/8 in. socket, a stool or stand for placing the chair upside down.

1. WARNING **Unplug the transformer from the wall outlet.**
2. Reach down into the chair's side pocket until you feel the disconnect latch on the hand control extension.
3. Pull back on the disconnecting latch.
4. Put one hand on the back of the extension wire plug base and one on the hand control plug base and pull the two pieces apart.
5. Gently push the chair over onto the footrest, turn it upside down or, gently push it over onto its side, opposite of the hand control.
6. Unplug the transformer and the hand control extension from the motor (or control box.)
7. Remove the four (4) T30 lag screws, eight (8) on models (501M26, 501L26, 501T28, 505M26) that hold the lift frame to the arm assembly.
8. Remove the hitch pin(s), clevis pin(s), and washers that fasten the recline strap(s) to the recline bar.
9. Remove the hand control extension wire clamp.
10. Lift the lift frame out of the chair shell and place it off to the side.
11. Use the 3/8 in. socket to remove the two (2) bolts that fasten each scissor mechanism to the arm assembly.

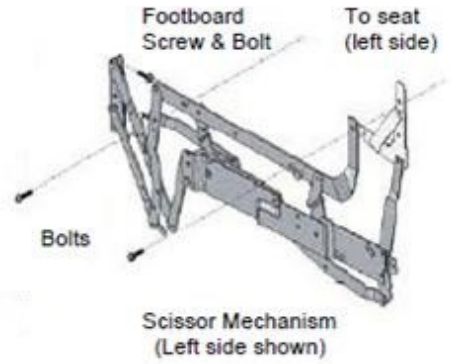

WARNING **While this next step can be done alone, it does require extra attention. You must remove the arm assembly without twisting the frame. Excessive twisting will cause the board holding the arms together to snap.**

12. Stand behind the chair and pull the arms away from the chair being careful not to get the material snagged in the scissor mechanisms.
13. Place the arm assembly to the side.
14. Remove two (2) bolts and Phillips screws that fasten the scissor mechanism to the footboard.
15. Use the 3/8 in. socket to remove the bolts that fasten the scissor mechanism to the seat and the footboard.
16. Use the 3/8 in. socket to install the bolts that fasten the new scissor mechanism to the seat and the footboard.
17. Install two (2) bolts and Phillips screws that fasten the new scissor mechanism to the footboard.
18. Place the arm assembly in place so that the bolt holes in the scissor mechanisms line up with the bolt holes in the armrest.
19. Install the four (4) bolts that fasten each scissor mechanisms to the arm assembly.
20. Make sure the footboard is completely closed.

Note: *When installing the lift frame the footboard must be completely closed when you fasten the lift frame to the armrest assembly or the footboard will not close properly.*

21. Place the lift frame onto the chair shell.
22. Use the hitch pin(s), clevis pin(s), and washers to fasten the recline strap(s) to the recline bar.
23. Use the four (4) T30 lag screws, eight (8) on models (501M26, 501L26, 501T28, 505M26) to fasten the lift frame to the arm assembly.
24. Reinstall the hand control extension wire clamp.
25. Plug the transformer and hand control extension into the motor or control box.
26. Plug the transformer back into the wall outlet and test.
27. Reinstall the seatback (if removed).

Recline Bar Replacement
Tools needed: Needle nose pliers, P2 Phillips screwdriver, T30 screw bit, wire cutters, zip ties, 3/8 in. socket, a stool or stand for placing the chair upside down.

1. WARNING **Unplug the transformer from the wall outlet.**
2. Reach down into the chair's side pocket until you feel the disconnect latch on the hand control extension.
3. Pull back on the disconnecting latch.
4. Put one hand on the back of the extension wire plug base and one on the hand control plug base and pull the two pieces apart.
5. Gently push the chair over onto the footrest, turn it upside down or, gently push it over onto its side, opposite of the hand control.
6. Remove the four (4) T30 lag screws, eight (8) on models (501M26, 501L26, 501T28, 505M26) that hold the lift frame to the arm assembly.
7. Remove the hitch pin(s), the clevis pin(s), and the washers that fasten the recline strap(s) to the recline bar.
8. Remove the hand control extension wire clamp.
9. Lift the lift frame out of the chair shell and place it off to the side.
10. Use the 3/8 in. socket to remove the two (2) bolts that fasten each scissor mechanism to the arm assembly.

WARNING **While this next step can be done alone, it does require extra attention. You must remove the arm assembly without twisting the frame. Excessive twisting will cause the board holding the arms together to snap.**

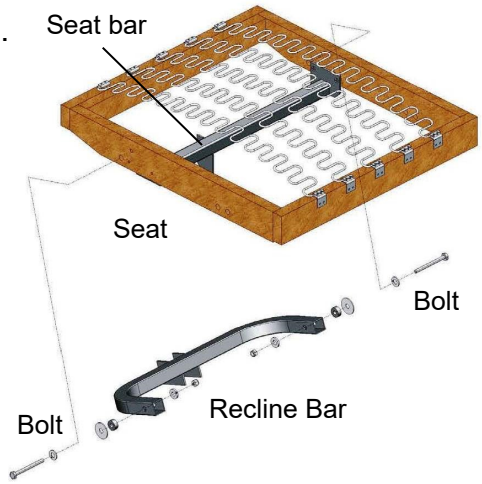

Note: Seat bar on MaxiComfort models only.

11. Stand behind the chair and pull the arms away from the chair being careful not to get the material snagged in the scissor mechanisms.
12. Place the arm assembly to the side.
13. Use the 1/2 in. socket to remove the bolts that fasten the recline bar to the seat. Note the position of the recline bar, so you do not install the new bar in upside down.
14. Use the 1/2 in. socket to install the bolts that fasten the new recline bar to the seat.
15. Place the arm assembly in place so that the bolt holes in the scissor mechanisms line up with the bolt holes in the armrest.
16. Install the two (2) bolts that fasten each scissor mechanisms to the arm assembly.
17. Make sure the footboard is completely closed.

Note: *When installing the lift frame the footboard must be completely closed when you fasten the lift frame to the armrest assembly or the footboard will not close properly.*

18. Place the lift frame onto the chair shell.
19. Use the hitch pin(s), the clevis pin(s), and the washers to fasten the recline strap(s) to the recline bar.
20. Use the four (4) T30 lag screws, eight (8) on models (501M26, 501L26, 501T28, 505M26) to fasten the lift frame to the arm assembly.
21. Reinstall the hand control extension wire clamp.
22. Plug the transformer back into the wall outlet and test.

Seat Assembly Replacement
Tools needed: Needle nose pliers, P2 Phillips screwdriver, T30 screw bit, wire cutters, zip ties, 3/8 in. socket, and a stool or stand for placing the chair upside down.

1. WARNING **Unplug the transformer from the wall outlet.**
2. Reach down into the chair's side pocket until you feel the disconnect latch on the hand control extension.
3. Pull back on the disconnecting latch.
4. Put one hand on the back of the extension wire plug base and one on the hand control plug base and pull the two pieces apart.
5. Gently push the chair over onto the footrest, turn it upside down or, gently push it over onto its side, opposite of the hand control. You can also remove the seat back.
6. Remove the four (4) T30 lag screws, eight (8) on models (501M26, 501L26, 501T28, 505M26) that hold the lift frame to the arm assembly.
7. Remove the hitch pin(s), the clevis pin(s), and the washers that fasten the recline strap(s) to the recline bar.
8. Remove the hand control extension wire clamp.
9. Lift the lift frame out of the chair shell and place it off to the side.
10. Use the 3/8 in. socket to remove the two (2) bolts that fasten each scissor mechanism to the arm assembly.

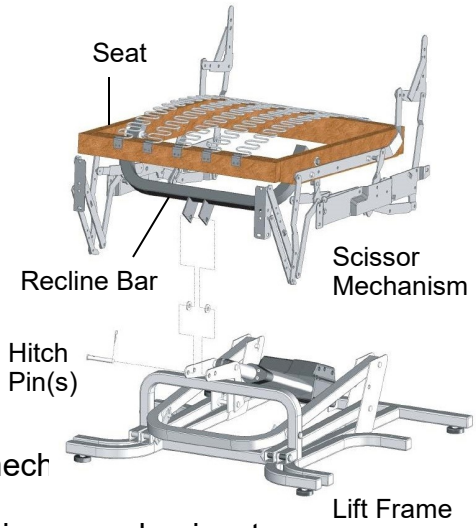

WARNING **While this next step can be done alone, it does require extra attention. You must remove the arm assembly without twisting the frame. Excessive twisting will cause the board holding the arms together to snap.**

11. Stand behind the chair and pull the arms away from the chair being careful not to get the material snagged in the scissor mech
12. Place the arm assembly to the side.
13. Remove the two (2) bolts and Phillips screws that fasten the scissor mechanism to the footboard.
14. Use the 3/8 in. socket to remove the bolts that fasten the scissor mechanism to the seat and to the footboard.
15. Use the 3/8 in. socket to install the bolts that fasten the scissor mechanism to the new seat.
16. Install the two (2) bolts and Phillips screws that fasten the new scissor mechanism to the footboard.
17. Place the arm assembly in place so that the bolt holes in the scissor mechanisms line up with the bolt holes in the armrest.
18. Install the two (2) bolts that fasten each scissor mechanisms to the arm assembly.
19. Make sure the footboard is completely closed.

Note: *When installing the lift frame the footboard must be completely closed when you fasten the lift frame to the armrest assembly or the footboard will not close properly.*

20. Place the lift frame onto the chair shell.
21. Use the hitch pin(s), clevis pin(s), and washers to fasten the recline strap(s) to the lift frame.
22. Use the four (4) T30 lag screws, eight (8) on models (501M26, 501L26, 501T28, 505M26) to fasten the lift frame to the arm assembly.
23. Reinstall the hand control wire clamp.
24. Plug the transformer back into the wall outlet and test.

Recline Straps
Tools needed: Needle nose pliers, zip ties, and a chair stand.

1. WARNING **Unplug the transformer from the wall outlet.**
2. Gently push the chair over onto the footrest, turn it upside down or, gently push it over onto its side, opposite of the hand control.
3. Remove the hitch pin(s), clevis pin(s), and washers that fasten the top of the motor(s) to the recline straps.
4. Remove the hitch pin(s), clevis pin(s), and washers that fasten the recline straps to the lift frame.
5. Remove the hitch pin(s), clevis pin(s), and washers that fasten the recline straps to the recline bar.
6. Use the hitch pin(s), clevis pin(s), and washers to fasten the new recline straps to the recline bar.
7. Use the hitch pin(s), clevis pin(s), and washers to fasten the new recline straps to the lift frame.
8. Use hitch pin(s), clevis pin(s), washers, and spacers to fasten the top of the motor to the new recline straps.
9. Turn the chair over onto the lift frame.
10. Plug the transformer into the wall outlet and test.
11. Reinstall the seatback (if removed).

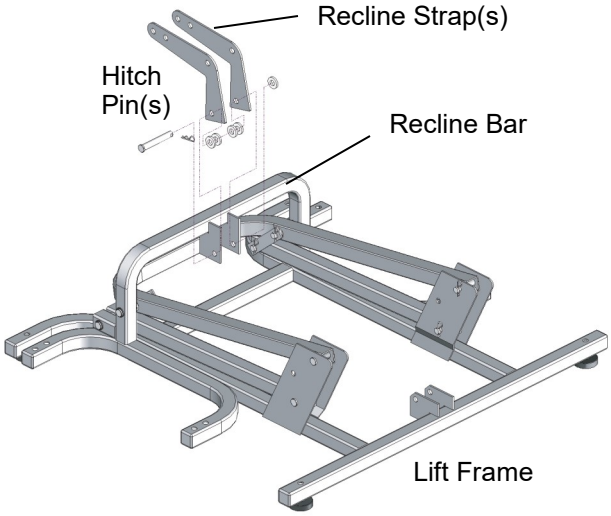

Fork Head Replacement
Part Number: GMOKI-13
Tools needed: Needle nose pliers, vise-grips, screwdriver, and a cloth.

This is the fork head.

The fork head is screwed into the push tube of the motor.

If you've ever heard the saying "Lefty-Loosey/Righty-Tighty" for removing and tightening bolts, now think the opposite.

The fork head is screwed into the push tube lefty-tighty/ righty-loosey, **but** the push tube is also screwed into the motor lefty-tighty/righty-loosey.

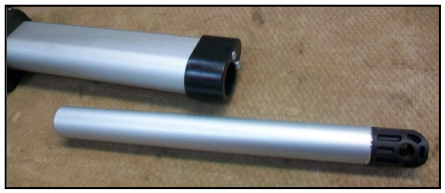

Once the motor is removed from the chair, the push tube can be spun in the clockwise direction until it comes completely out of the motor as shown.

If you completely remove the push tube, to properly line it back up for the installation in the chair, tighten the push tube all the way in, then back it off 2 full turns and then just enough to get it attached to the motor straps with the clevis pin.

To change just the fork head you want to grab hold of the push tube with a pair of vise-grips. **Use a cloth to protect the tube** to prevent the whole tube from spinning when you try to loosen the fork head.

To loosen, turn the plastic fork head clockwise.

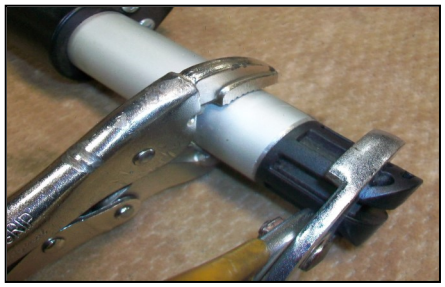

If enough of the broken fork tube is still there you can put a large screwdriver through the holes to get leverage to spin it off. If not you'll need another pair of vise-grips or pliers to break it loose.

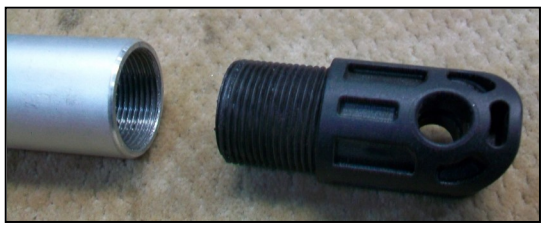

Again...lefty-tighty/righty-loosey.

Spacer Bar Replacement (See MaxiComfort diagram on page 53.)
Tools needed: Needle nose pliers, 7/16” wrench (qty.2)

This is what a spacer bar looks like.

The spacer bar is located at the rear of the chair across the top of the seat. The back is attached to the ends of the spacer bar.

To replace the spacer bar, you will need to remove the back from the chair.

With the chair plugged in, use the hand control to recline the back to make it easier to get to the nuts you will need to remove.

There are 3 nuts on each side of the back that you will need to remove. Place a wrench on the head of each bolt to hold it in place as you remove the nuts.

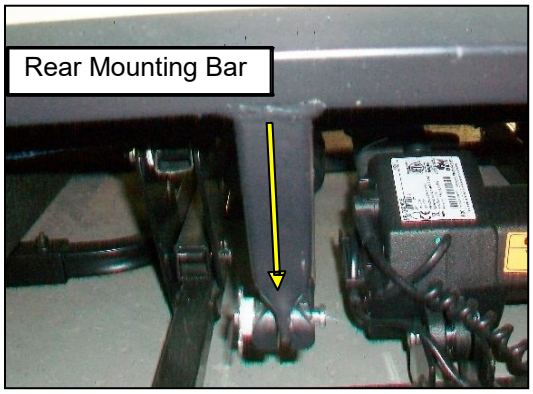

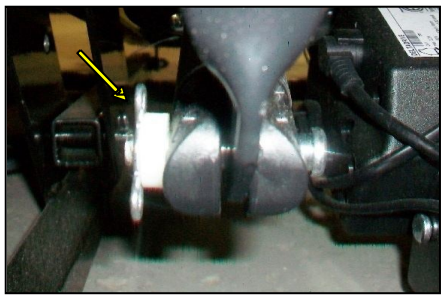

Remove the bow-tie clip and slide the pin out.

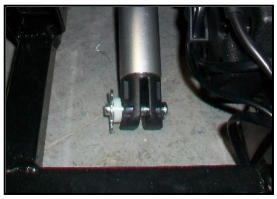

Allow the motor shaft to rest on the floor.

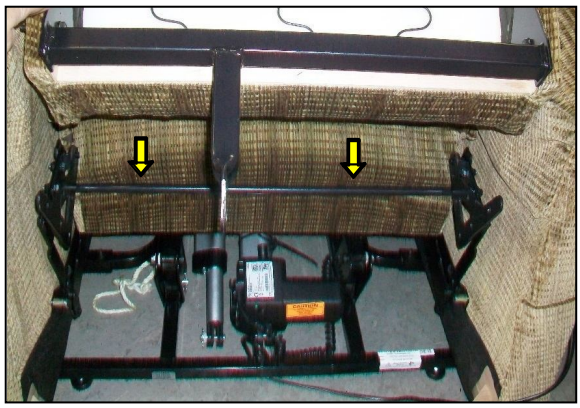

Now that you have the 6 nuts removed, the motor is no longer attached; you can remove the back by working the bolts out of the holes on each side of the spacer bar and pushing the back forward onto the seat.

The spacer bar is located across the top of the rear of the seat.

You can let the back rest on the seat as you continue to work.

Grab hold of the end piece of the spacer bar and rotate it up out of you way so your can get to the bolts that attach the spacer bar to the rear of the scissor mechanism.

There are 2 bolts with nuts that attach the spacer bar to each side of the scissor mechanism.

Once the total of 4 bolts, 2 from each side, is removed, you can install the new spacer bar and begin installing the back.

Headrest Motor Replacement (Model: PR630. PR632)
Motor Headrest HR00 P/N: GM0900
Tools needed: Needle nose pliers, cutters

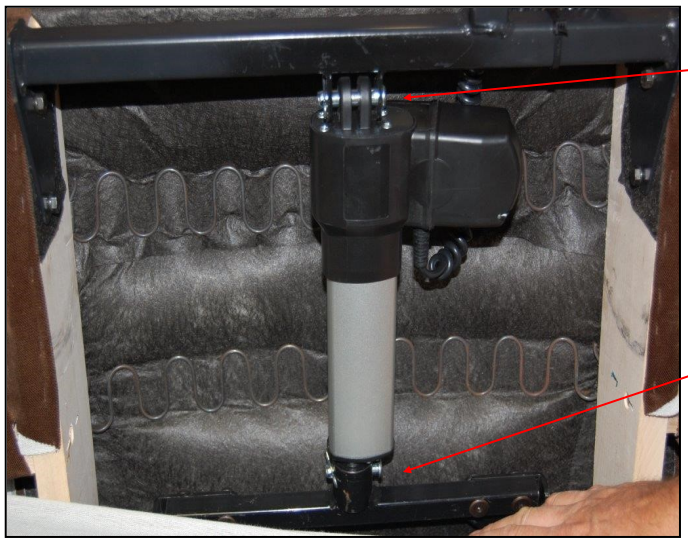

Step1
Insert the base of the clevis mount at the base of the motor in between the clevis bracket on the back bar insert a 3/8 x 1 5/8, part no. BB5512 clevis pin thru the clevis mount and clevis bracket, lock pin in place with a bow shaft hitch pin, part no. BB5514.

Step2
Insert the motor tip into the cup on the head rest cross bracket line up the holes in the cup and motor tip insert a 3/8 x 1 5/8 clevis pin, part no. BB5512 thru the holes and secure the clevis pin with a bow shaft hitch pin, part no. BB5514.

Step 3
Run the coil cord coming out of the motor up between the back bar and the bottom of the wooden back frame secure the cord using a black 8 inch zip tie.

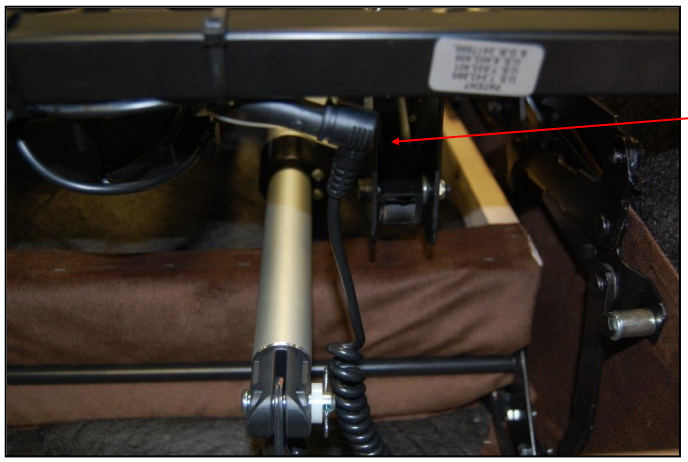

Step 4
Plug the cord from the motor into the hand control extension cable attached to the rear motor mount bar of the metal frame.

Head Pillow Replacement (Model: PR630, PR632)
Tools needed: Drill equipped with a 3/8 inch drive bit.

Step 1
Press the head up arrow on the hand control until the head rest brackets are completely raised up and exposed above the top of the inside back upholstery.

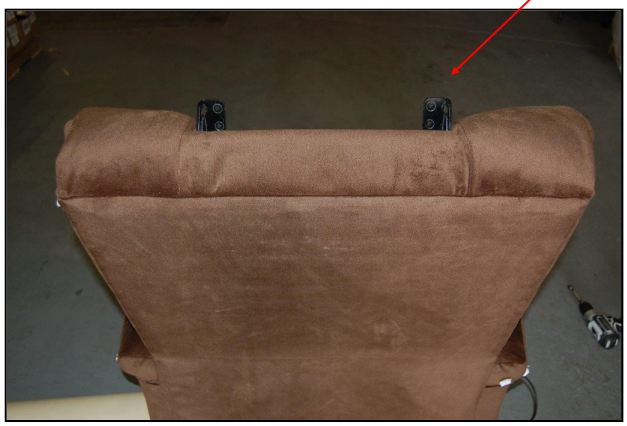

Step 2
Line up the four holes in the head rest bracket with the four T-Nut holes on the back of the head pillow, secure the head pillow to the bracket using a 3/8 inch drive bit and four 1/4-20 x 1 inch whiz lock bolts part number MS10WL-BO.

Scissor Mechanism Parts

Component	Description
RM621L & RM621R	Recline Mech 3 Way Left and Right Side Sit
RM622L & RM622R	Recliner Mech HD Maxi Left and Right Side Sit
RM8300L & RM8300R	Recliner Mech 2 Way Left and Right Side Sit
RM620L & RM620R	Recline Mech Maxi Comfort Left and Right Side Sit
RM631l & RM631R	342 Recline Mech Left & Right Side

We do recommend both sides be replaced.

Note: For the PR502 chair, refer to the diagram on page 54.

RM621L & RM621R

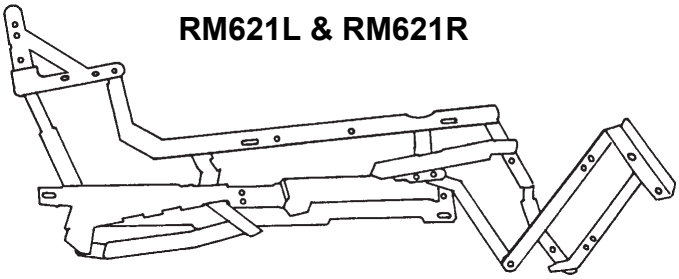

RM622L & RM622R

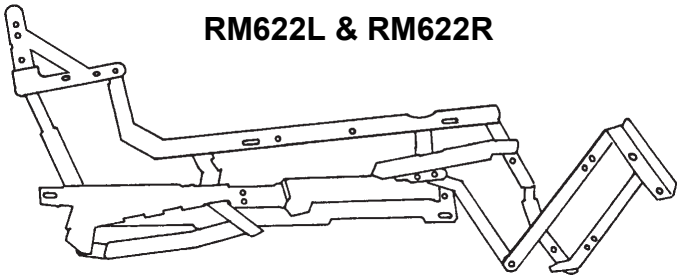

RM8300L & RM8300R

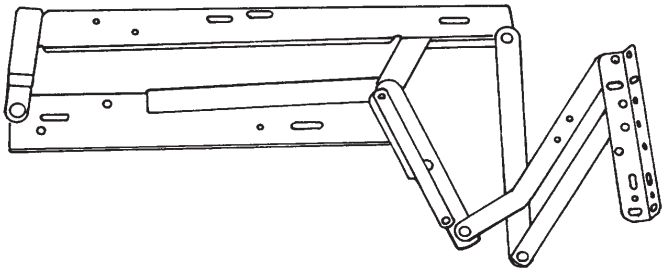

RM620L & RM620R

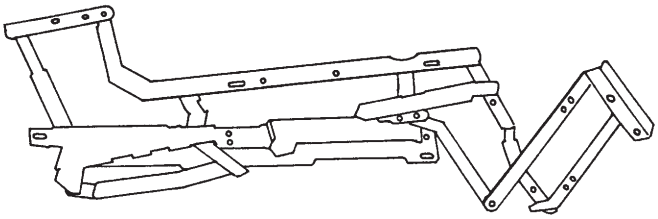

RM631L & RM631R

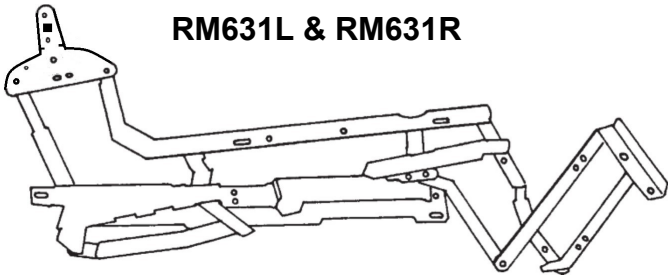

OKIN Lift Motor Comparison Old Style vs. New Style

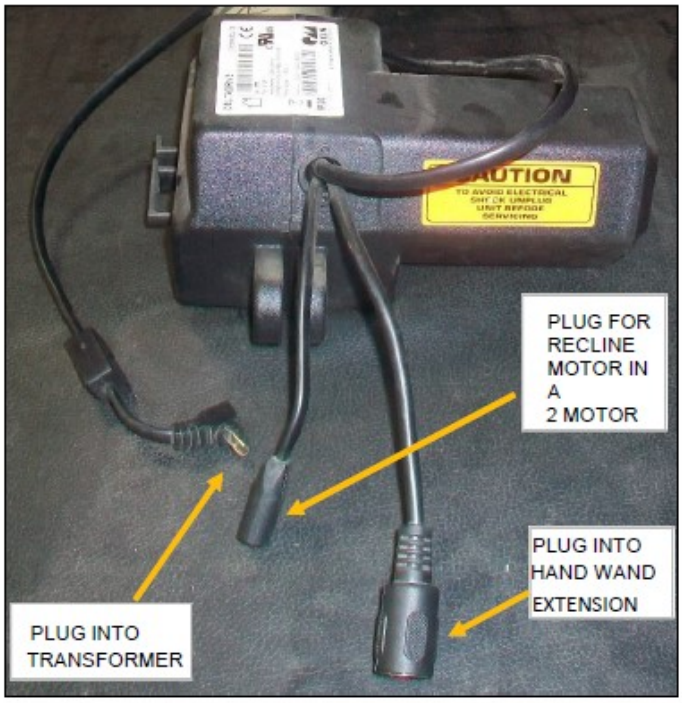

OLD STYLE LIFT MOTOR:
OKIN MODEL # : 1.31.000.034.30

3 WIRES COME OUT OF THE BACK OF THE MOTOR CASE

NEW LIFT MOTOR:
OKIN MODEL #: 72276

1 WIRE COMES OUT OF THE BACK OF THE MOTOR CASE

THE HAND CONTROL PLUGS INTO THE TOP SIDE OF THE MOTOR CASE

THE WIRE PLUGS INTO THE TRANSFORMER

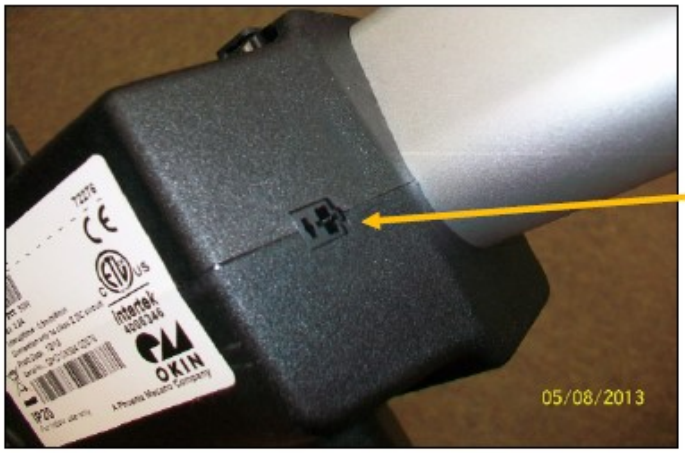

IN A 2 MOTOR CHAIR, THE RECLINE MOTOR PLUGS INTO THE SIDE OF THE LIFT MOTOR CASE

RICHMAT MOTORS

GM1400-LM
Use for 2-position and 3-position chairs.

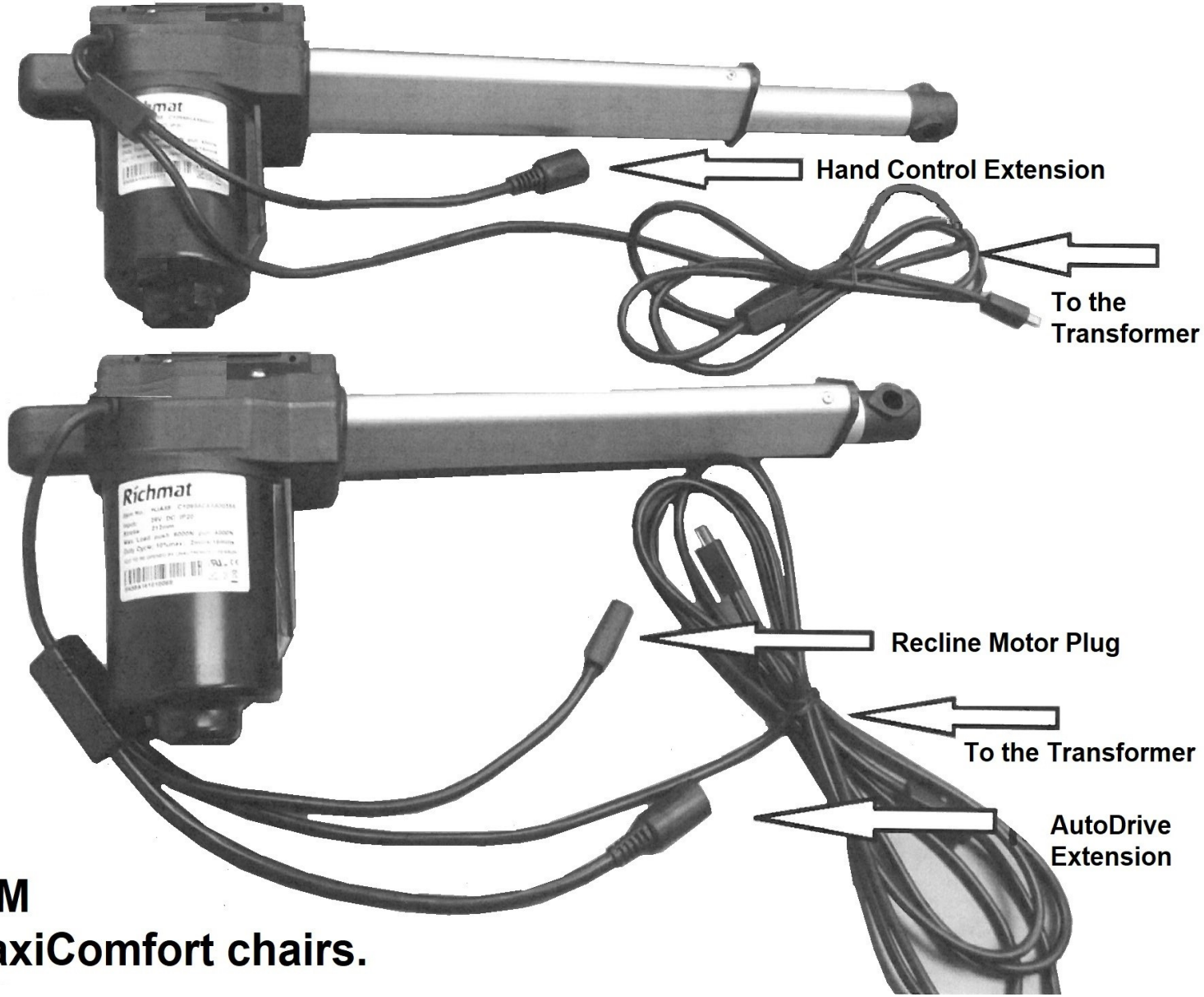

GM1450-LM
Use for MaxiComfort chairs.

Single Motor Electrical Diagram

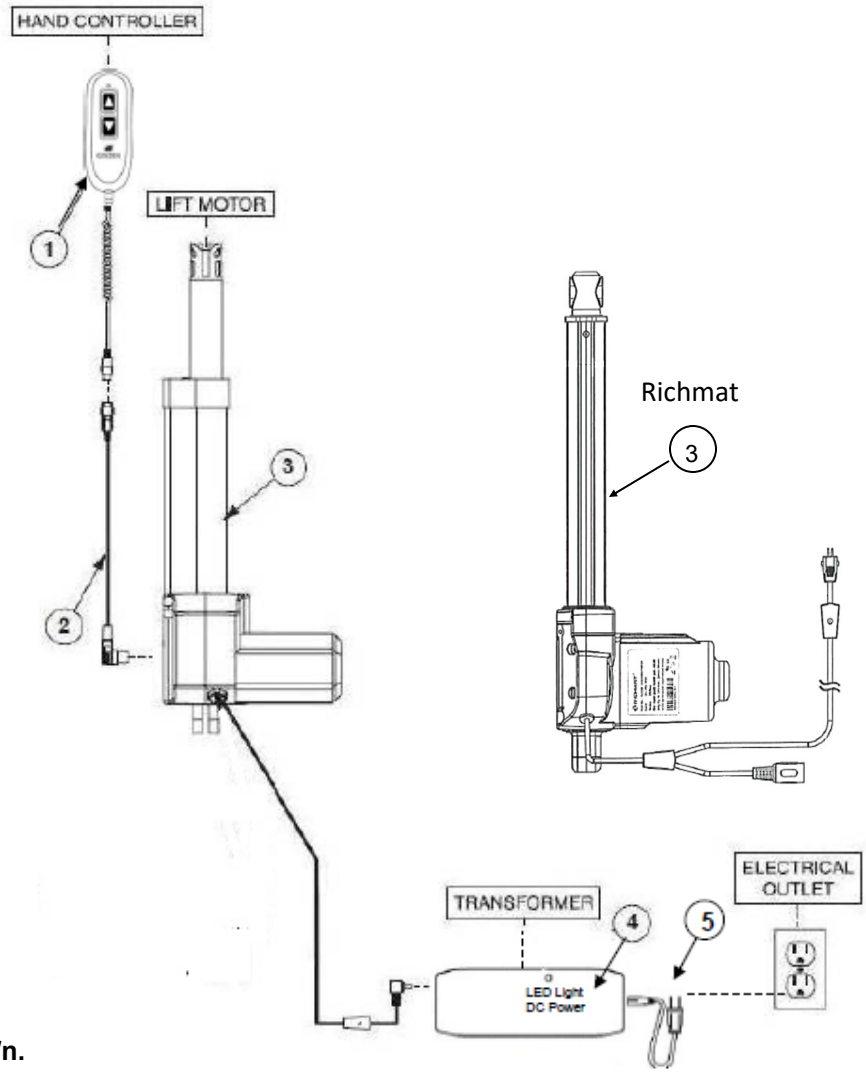

*** Current p/n.**

REF #	PART NUMBER	DESCRIPTION	QTY.
*1	ZK1200-HC-1	Hand Wand, 2 Button LED Gold with Walnut Burl Grain USB	1
1	ZK1200-HC	Hand Wand, 2 Button LED Gold with Walnut Burl Grain	1
2	ZKAD-EXT	Extension Cord for ZKAD-1	1
3	GM1500-LM	Motor Chair Okin Maxi Lift Motor	1
*3	GM1400-LM	Chair Lift Motor 1400	1
*3	GM1410-LM	Chair Lift Motor 1410	1
*4	GM2102-TR-PK	Chair Motor Transformer 2 Amp with US Plug Pack	1
4	GM2000-TR	Chair Motor Transformer 2000	1
*4	GM1400-TR	Chair Transformer 1400	1
*4	GM1410-TR	Chair Transformer 1410	1
5	GM1501-APUS-36	Transformer Plug 1501-A Standard USA 36 inches	1

Smart Tek® System

Models: PR401, PR401L, PR747, PR643, PR410, PR751TY, PR752, PR451, PR501JP, PR501S, PR501M, PR501L, PR501T, PR501S-23, PR200, PR355M, PR355L, PR359M, PR359L, PR404

Dual Motor Electrical Diagram

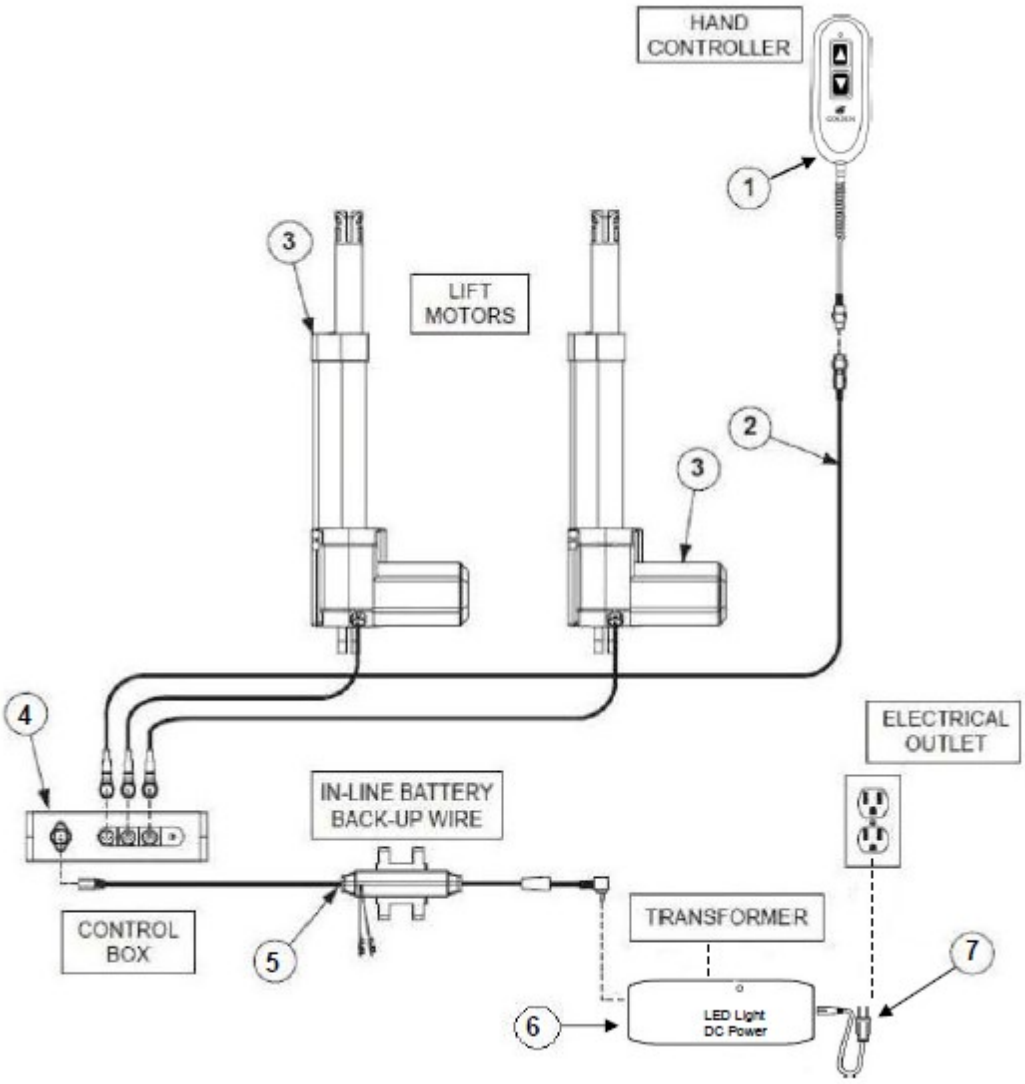

*** Current p/n.**

REF #	PART NUMBER	DESCRIPTION	QTY.
*1	ZK1200-HC-1	Hand Wand, 2 Button LED Gold with Walnut Burl Grain USB	1
1	ZK1200-HC	Hand Wand, 2 Button LED Gold with Walnut Burl Grain	1
2	ZKAD-EXT	Extension Cord for ZKAD-1	1
3	GMOKI-28W	Motor Chair Okin 26-28 Wide Motor	2
4	GMOKI-CB	Motor Chair Okin 26-28 Wide Control Box 4/2003	1
5	GM1502L	Motor Chair Battery Back Up Wire with LED	1
*6	GM2102-TR-PK	Chair Motor Transformer 2 Amp with US Plug Pack	1
6	GM2000-TR	Chair Motor Transformer 2000	1
7	GM1501-APUS-36	Transformer Plug 1501-A Standard USA 36 inches	1

Triple Motor Electrical Diagram

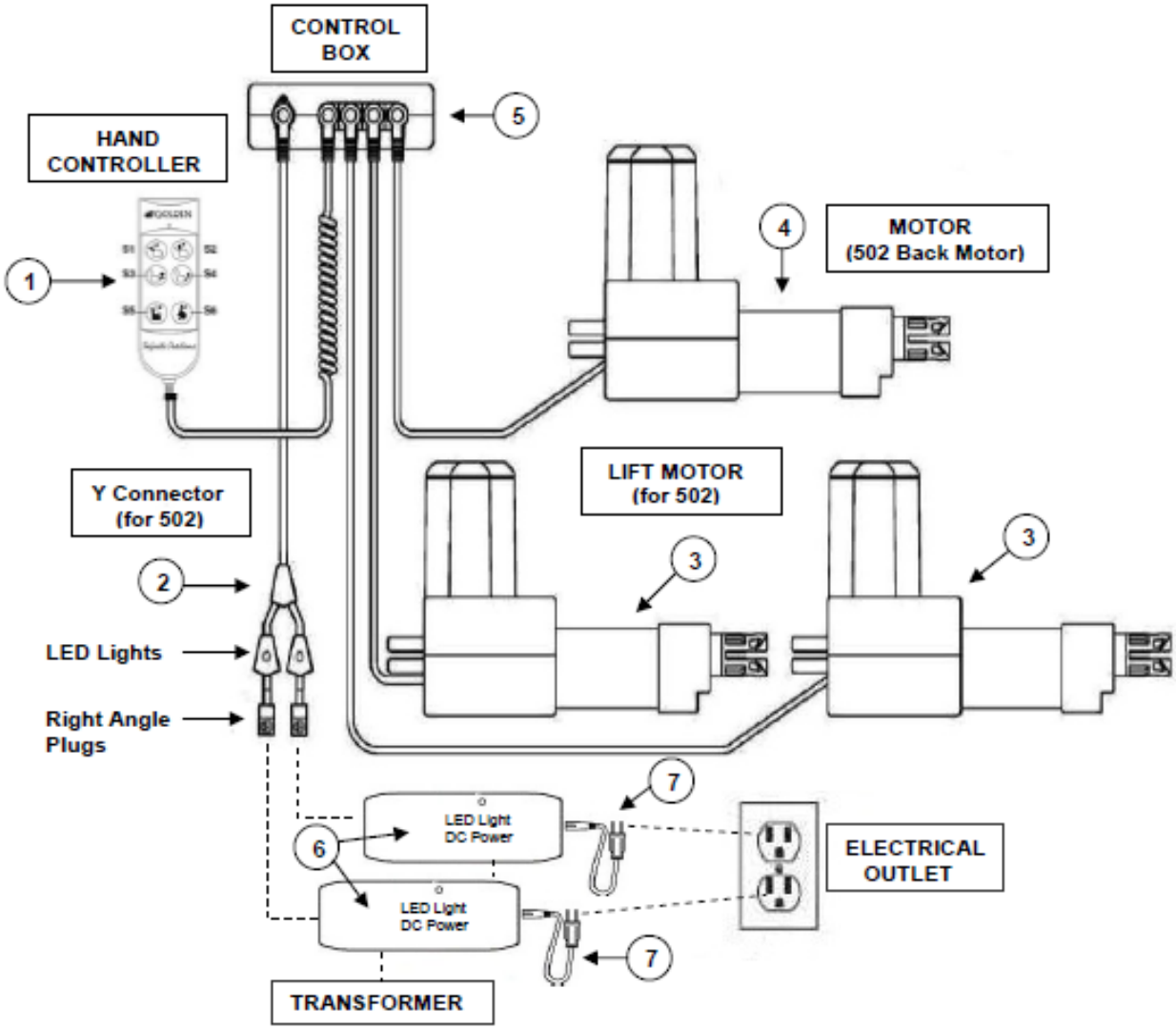

REF #	PART NUMBER	DESCRIPTION	QTY.
1	ZK756HCL	Hand Wand for Maxi Comfort LED	1
2	GM502YL	Y Connector with LED light	1
3	GMOKI-28W	Motor Chair Okin 26-28 Wide Motor	2
4	GMOKI1502OM	Okin Motor, for 502	1
5	GMOKI-CB	Motor Chair Okin 26-28 Wide Control Box 4/2003	1
6	GM2000-TR	Chair Motor Transformer 2000	2
7	GM1501-APUS-36	Transformer Plug 1501-A Standard USA 36 inches	2

Smart Tek® System
Model: PR502

PR-505M26 Electrical Diagram

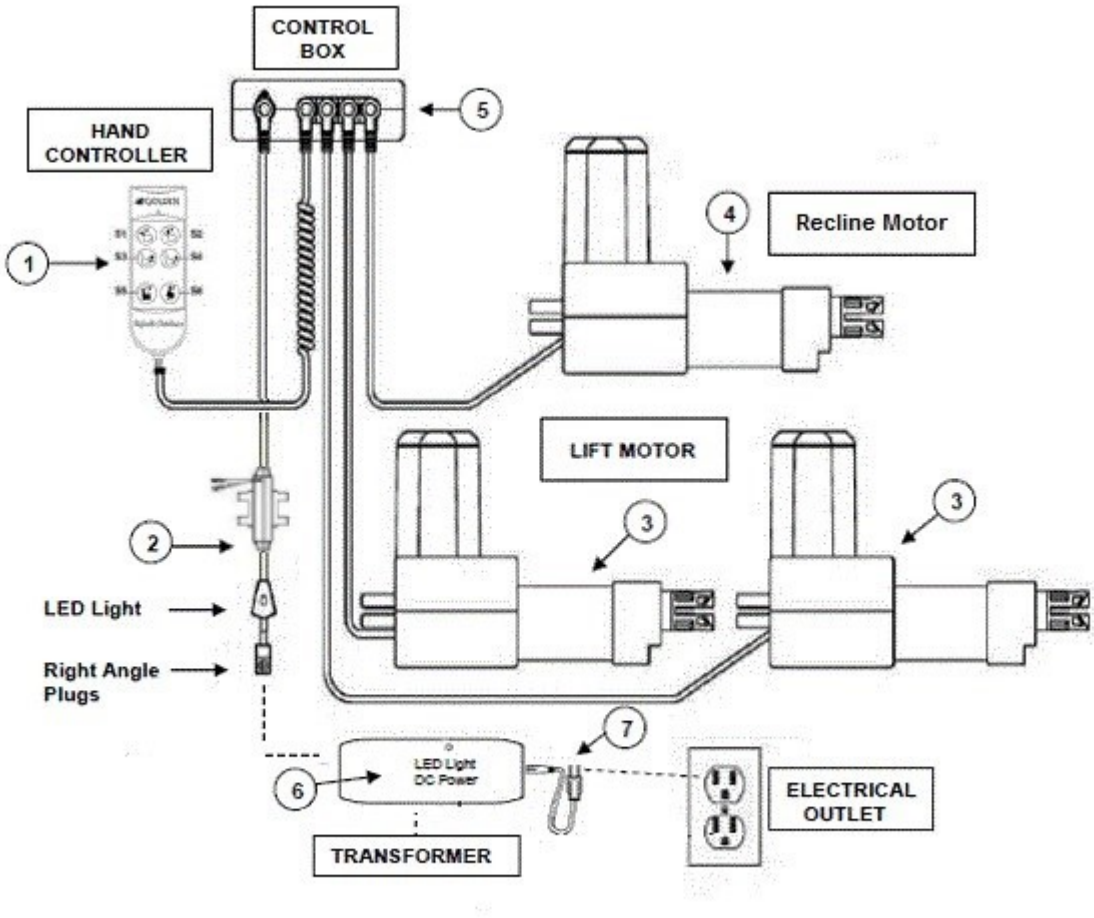

*** Current p/n.**

REF #	PART NUMBER	DESCRIPTION	QTY.
1	ZK756HCL	Hand Wand for Maxi Comfort LED	1
2	GM1502L-B	Motor Chair Battery Back Up Wire for GM1501-B with LED	1
3	GMOKI-28W	Motor Chair Okin 26-28 Wide Motor	2
4	GM756R	Motor Chair Okin Recline Motor	1
5	GMOKI-CB	Motor Chair Okin 26-28 Wide Control Box 4/2003	1
*6	GM2102-TR-PK	Chair Motor Transformer 2 Amp with US Plug Pack	1
6	GM2000-TR	Chair Motor Transformer 2000	1
7	GM1501-APUS-36	Transformer Plug 1501-A Standard USA 36 inches	1

Smart Tek® System
Model: PR-505M26, PR535-M26

PR-505M26 Wire Routing

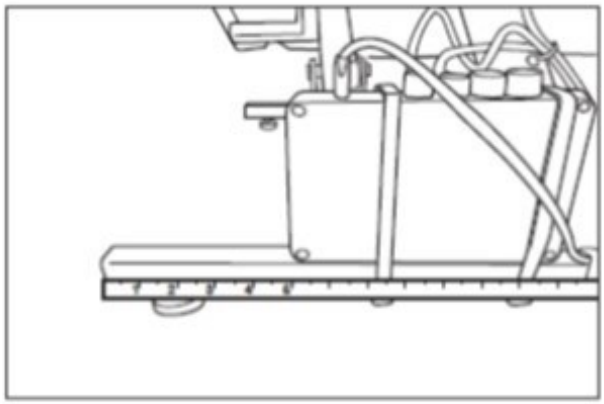

Control box is mounted to the rear left side of the lift frame at no less than 5 inches from the end of the frame.

There is Velcro attached to the frame and the bottom of control box and 2 large zip ties are used to hold it in place.

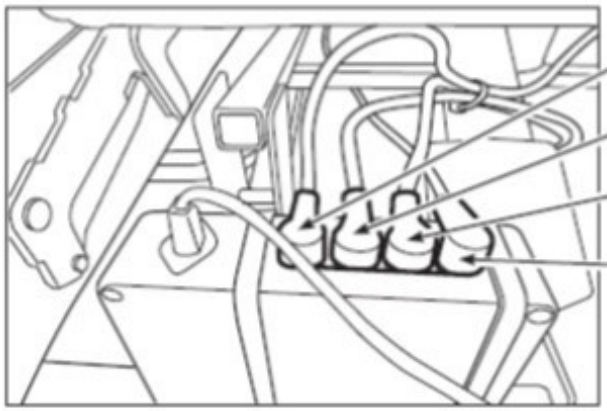

2 lift motor wires are bundled and zip-tied to the lift frame

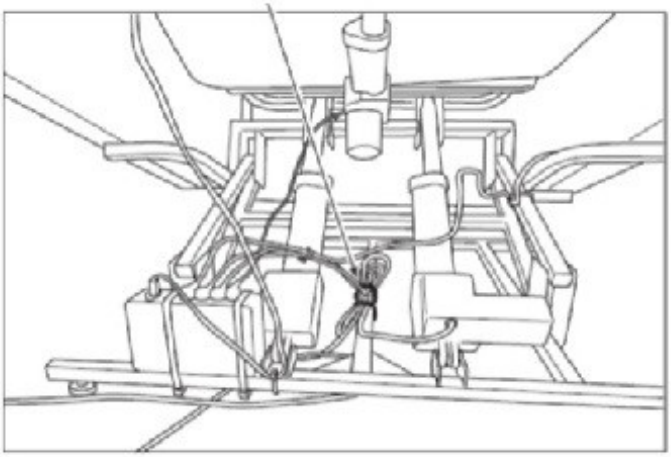

Control Box placement between the motors as shown starting with:

S/N: GT1709DAP02183

PR-505M26 Wire Routing

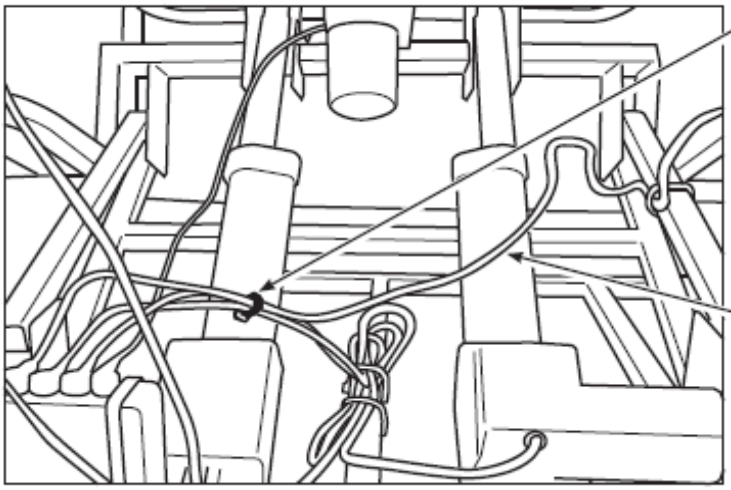

1 zip-tie is used to attach the hand control wire to the left and right lift motor wires just to keep them neat

Hand control wire runs over the top of the lift motors

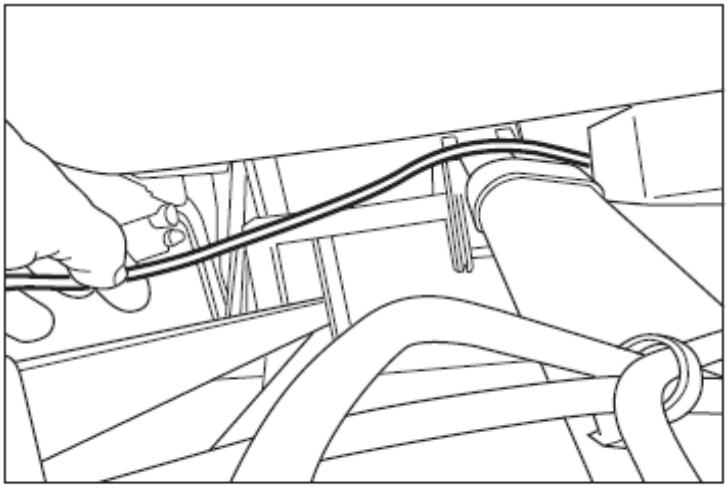

The power wire for the slave motor (recline motor) isn't tied back anywhere. It runs across the top of the left lift motor.

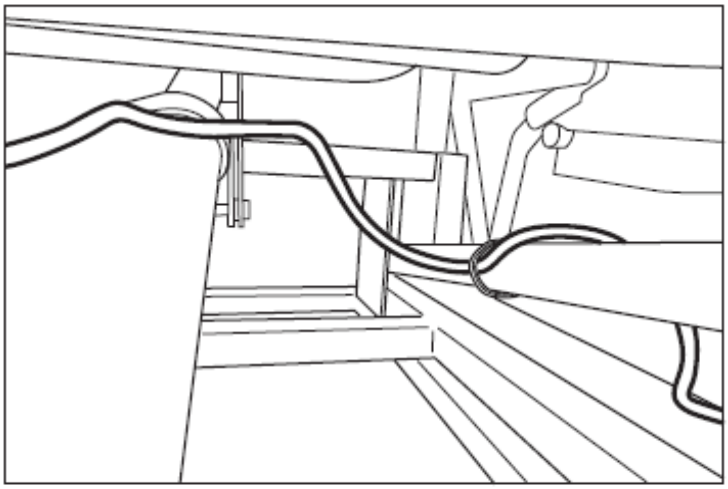

The hand control extension wire runs along the top of the right lift motor and is loosely attached to the top square tubing of the lift frame with one black zip-tie

MAXI MOTOR ELECTRICAL SETUP

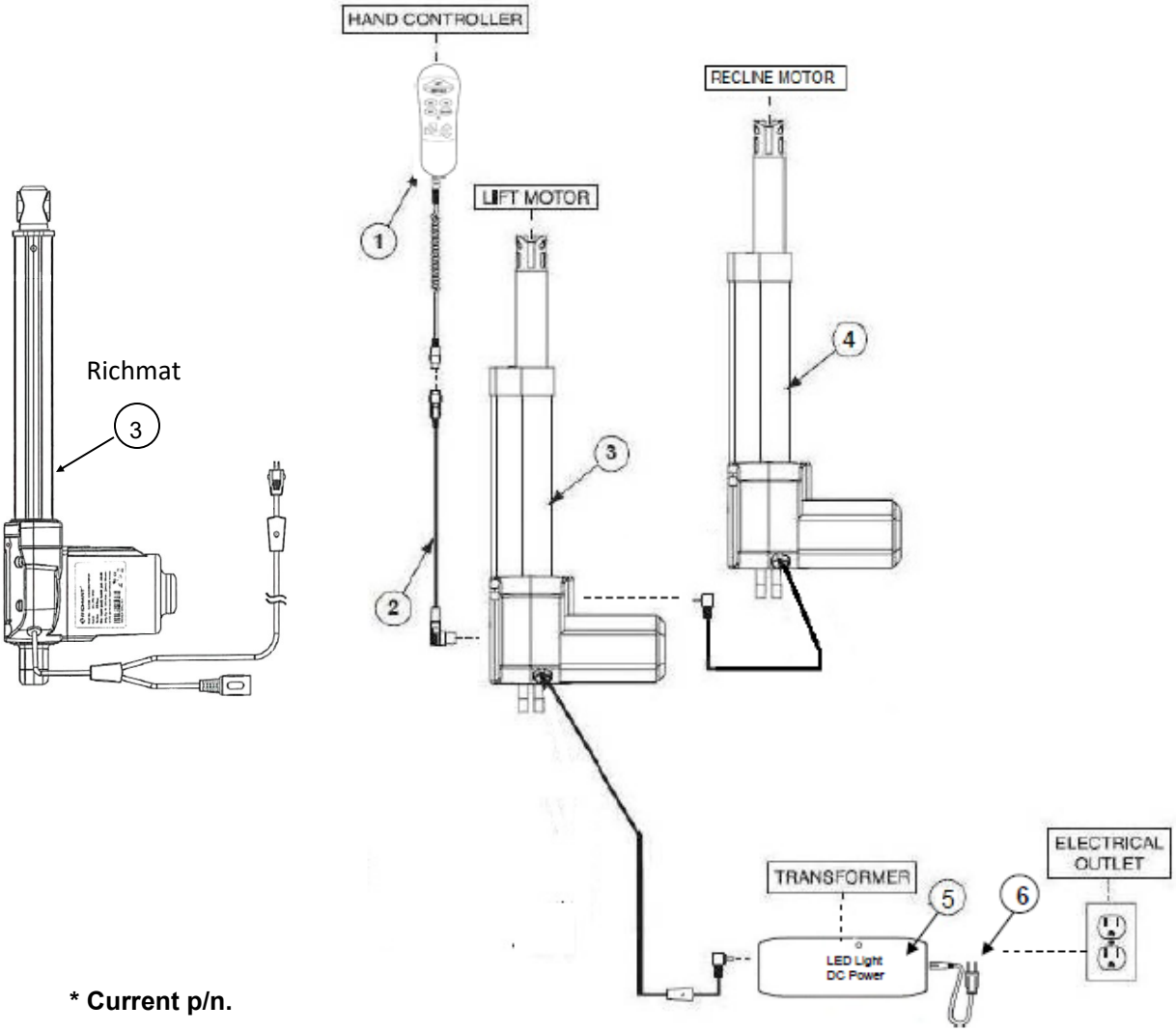

*** Current p/n.**

REF #	PART NUMBER	DESCRIPTION	QTY.
*1	ZKAD-5	Hand Wand Faster AutoDrive Up and M Button	1
1	ZKAD-4	Hand Wand Faster AutoDrive Steel Plate	1
1	ZKAD-1	Hand Wand, AutoDrive for Lift Chairs	1
*2	ZK1100-EXT	Extension for Hand Control for ZK1100 2 Button System	1
2	ZKAD-EXT	Extension Cord for ZKAD-1	1
3	GM1500-LM	Motor Chair Okin Maxi Lift Motor	1
*3	GM1450-LM-ORG	Chair Lift Motor 1450 Original ending 355	1
4	GM2000-RM	Chair Motor Faster Recline	1
4	GM756R	Motor Chair Okin Recline Motor	1
*4	GM1450-RM-ORG	Chair Recline Motor 1450 Original ending 008	1
*5	GM2102-TR-PK	Chair Motor Transformer 2 Amp with US Plug Pack	1
5	GM2000-TR	Chair Motor Transformer 2000	1
5	GM1450-TR	Chair Transformer 1450	1
6	GM1501-APUS-36	Transformer Plug 1501-A Standard USA 36 inches	1

Smart Tek® System

Models: PR712, PR510-SME, PR510-MLA, PR756MC, PR756L, PR508M, PR505JP, PR505S, PR505M, PR505L, PR-505TAL, PR713, PR535-PSA, PR535-M, PR535-L, PR535-T

Note: PR-505TAL uses the GM756R motor chair Okin recline motor.

MAXI MOTOR WITH HEAD REST MOTOR ELECTRICAL SETUP

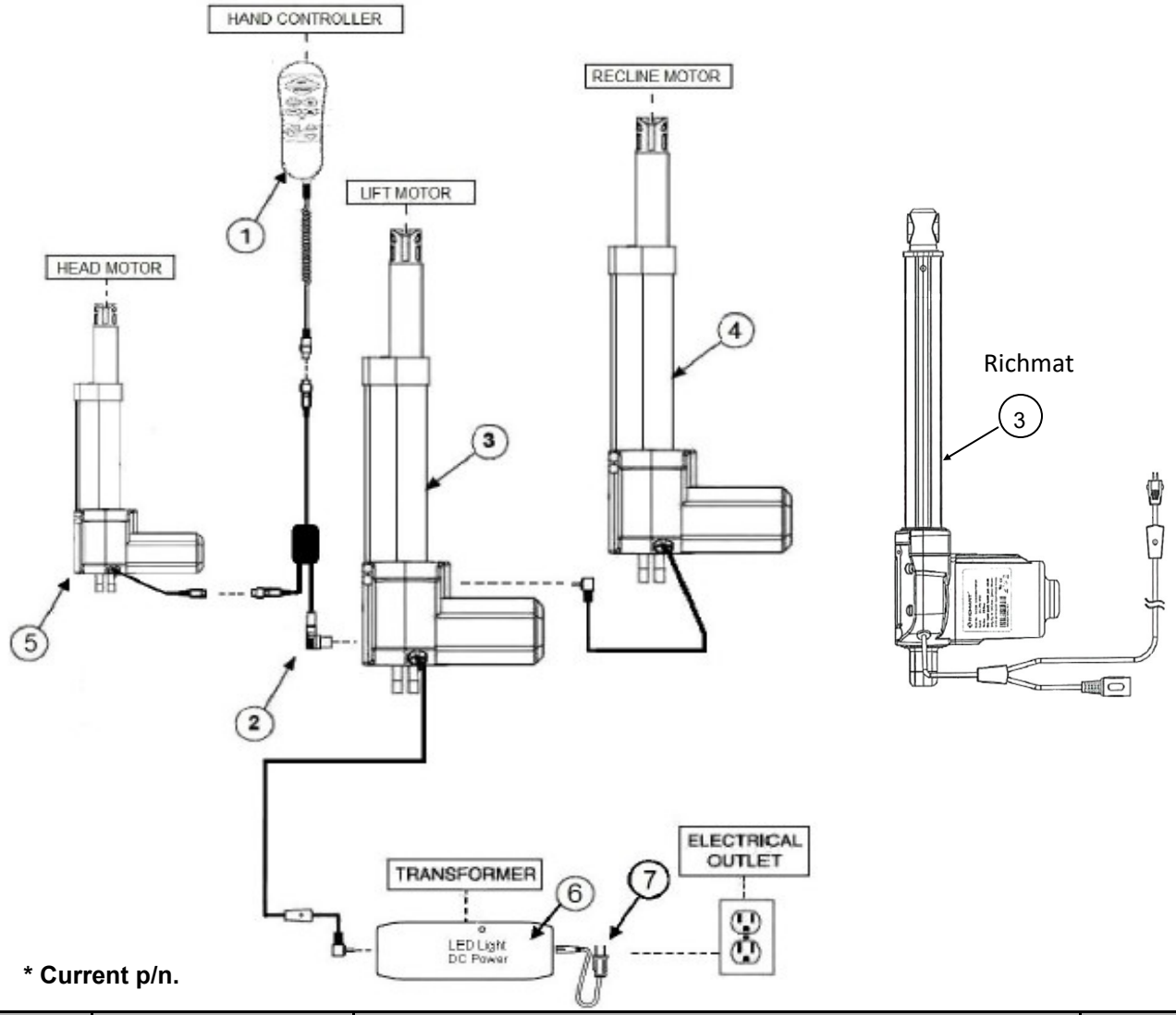

*** Current p/n.**

REF #	PART NUMBER	DESCRIPTION	QTY.
*1	ZKAD-HR-1	Hand Wand Fast Auto Drive Head Rest Up and M Button	1
1	ZKAD-HR	Hand Wand Fast Auto Drive With Head Rest	1
2	LCMHR-C53	Cable 53 inch 5 Pin and Motor at Y Female 7Pin Quick Release	1
3	GM1500-LM	Motor Chair Okin Maxi Lift Motor	1
*3	GM1450-LM-ORG	Chair Lift Motor 1450 Original ending 355	1
4	GM2000-RM	Chair Motor Faster Recline	1
*4	GM1450-RM-ORG	Chair Recline Motor 1450 Original ending 008	1
5	GM0900	Motor Headrest HR00	1
5	GM0901	Motor Headrest Okin JLDQ14 Micro Drive	1
*5	GM0910	Motor Headrest	1
*6	GM2102-TR-PK	Chair Motor Transformer 2 Amp with US Plug Pack	1
6	GM2000-TR	Chair Motor Transformer 2000	1
*6	GM1450-TR	Chair Transformer 1450	1
7	GM1501-APUS-36	Transformer Plug 1501-A Standard USA 36 inches	1

MAXI MOTOR WITH TWILIGHT CONTROL ELECTRICAL SETUP

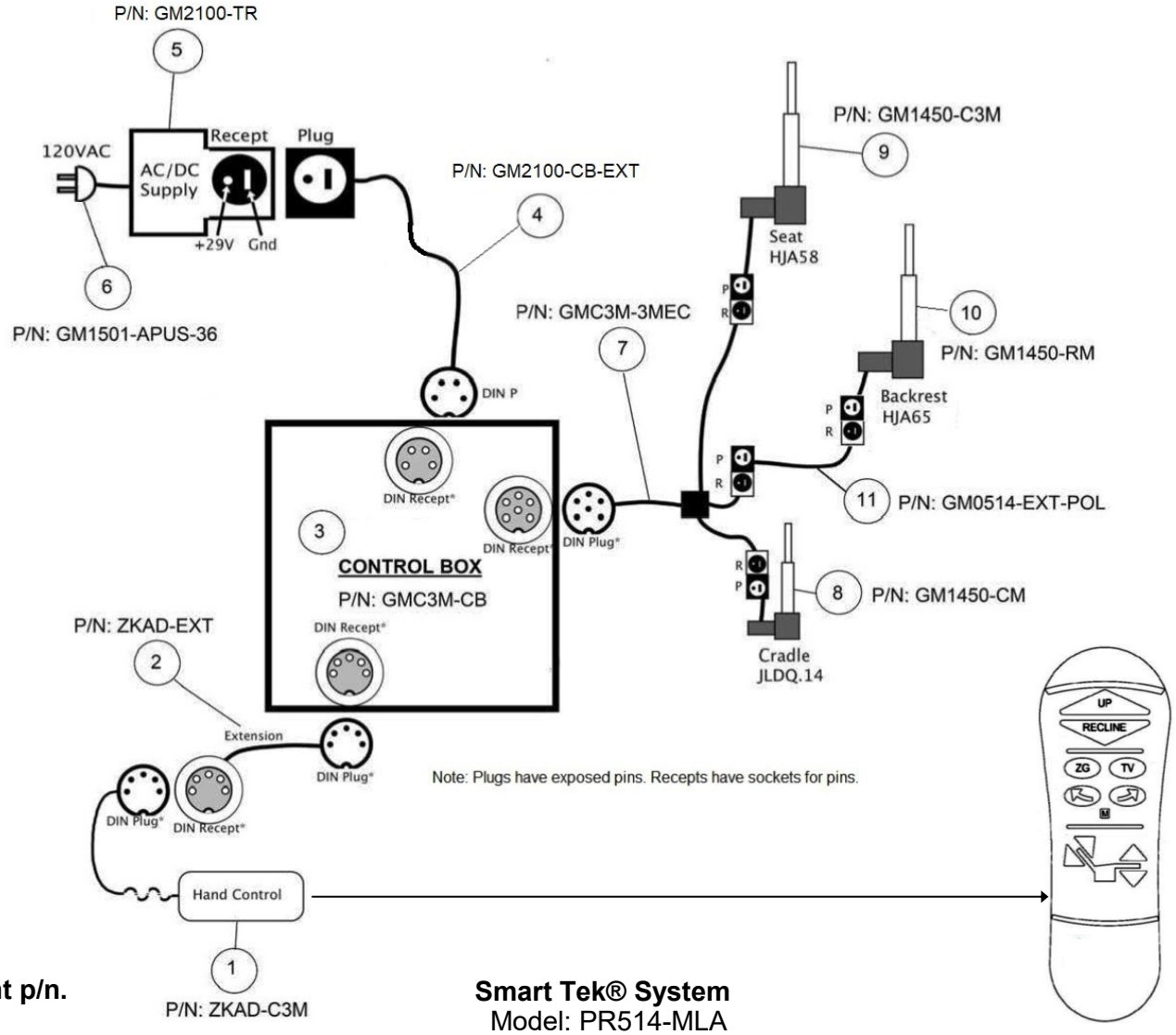

*** Current p/n.**

Smart Tek® System
Model: PR514-MLA

REF #	PART NUMBER	DESCRIPTION	QTY.
1	ZKAD-C3M	Hand Wand Auto Drive Cradle 3 Motor Up and M	1
2	ZKAD-EXT	Extension Cord for ZKAD-1	1
3	GMC3M-CB	Control Box Cradle 3 Motor Auto Drive	1
4	GM2100-CB-EXT	Control Box Cradle Transformer 2100 Extension	1
*5	GM2102-TR-PK	Chair Motor Transformer 2 Amp with US Plug Pack	1
5	GM2100-TR	Chair Motor Cradle Transformer 3 Amp	1
6	GM1501-APUS-36	Transformer Plug 1501-A Standard USA 36 inches	1
7	GMC3M-3MEC	Control Box Extension C3M to Motor	1
8	GM1450-CM	Chair Lift Motor 1450 Cradle	1
*9	GM1450-LM	Chair Lift Motor Richmat	1
9	GM1450-C3M	Chair Lift Motor 1450-C3M	1
10	GM1450-RM	Chair Recline Motor 1450	1
11	GM0514-EXT-POL	Polarity Extension 514	1

3-WAY MOTOR WITH TWILIGHT CONTROL ELECTRICAL SETUP

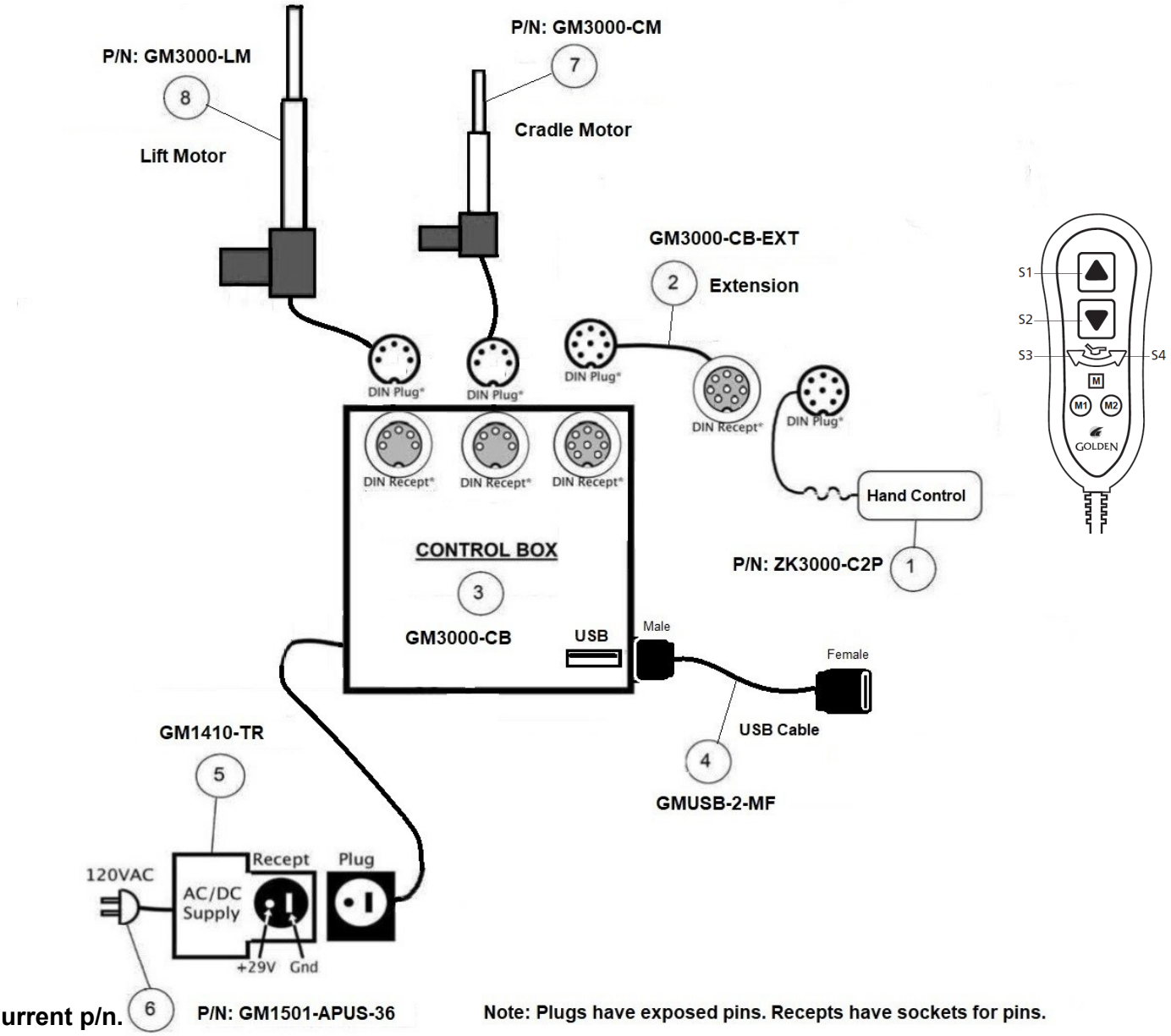

*** Current p/n.** **P/N: GM1501-APUS-36** **Note: Plugs have exposed pins. Recepts have sockets for pins.**

REF #	PART NUMBER	DESCRIPTION	QTY.
1	ZK3000-C2P	Hand Control (2 Button / 2 Position Cradle) - GT	1
2	GM3000-CB-EXT	Control Box Cradle Extension	1
3	GM3000-CB	Control Box Cradle	1
4	GMUSB-2-MF	Chair USB 2.0 Male to Female 6 Feet Recharging Cable	1
*5	GM2102-TR-PK	Chair Motor Transformer 2 Amp with US Plug Pack	1
5	GM1410-TR	Chair Transformer 1410	1
6	GM1501-APUS-36	Transformer Plug 1501-A Standard USA 36 inches	1
7	GM3000-CM	Cradle Motor w/ Hall Sensor	1
8	GM3000-LM	Lift Motor w/ Hall Sensor	1

WALL HUGGER ELECTRICAL SETUP

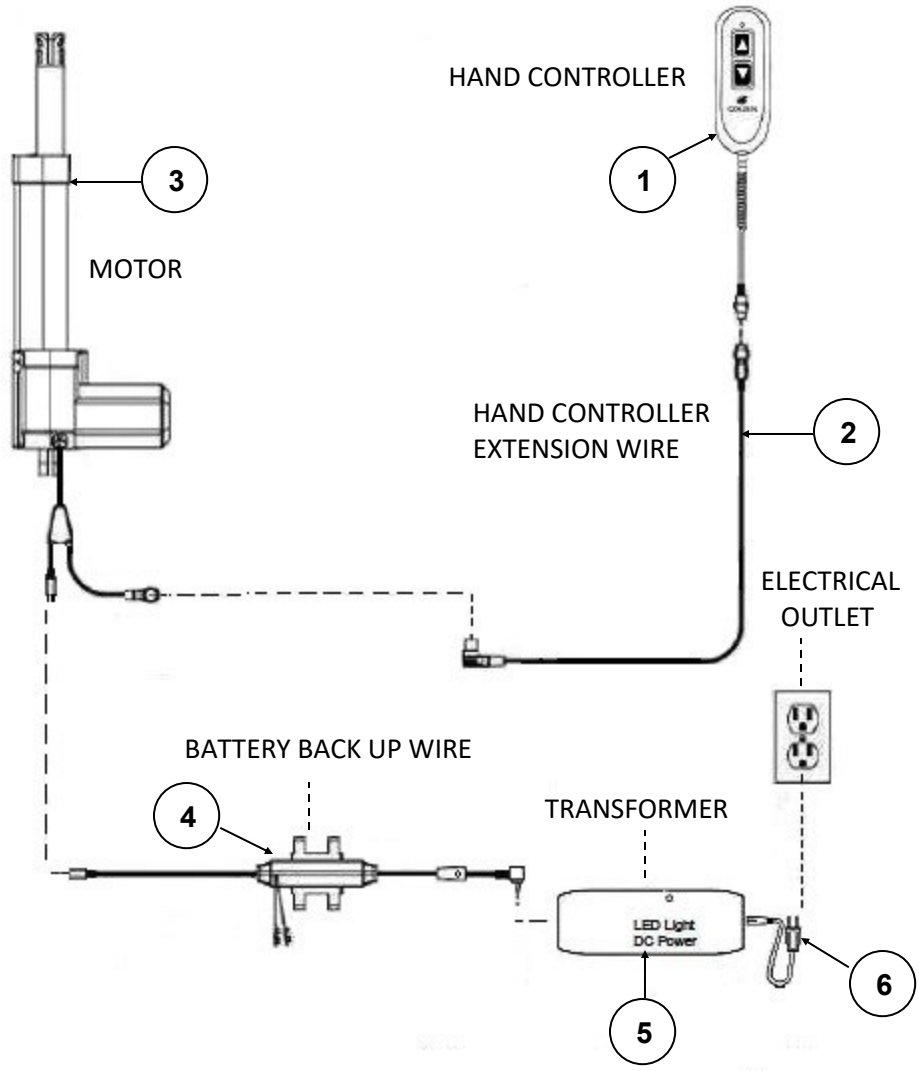

*** Current p/n.**

REF #	PART NUMBER	DESCRIPTION	QTY.
*1	ZK1200-HC-1	Hand Wand, 2 Button LED Gold with Walnut Burl Grain USB	1
1	ZK1200-HC	Hand Wand, 2 Button LED Gold with Walnut Burl Grain	1
2	ZK1100-EXT	Extension for Hand Control for ZK1100 2 Button System	1
3	GM1900	Motor Wall Hugger 992	1
4	GM1502L-B	Motor Chair Battery Back Up Wire for GM1501-B with LED	1
5	GM2000-TR	Chair Motor Transformer 2000	1
6	GM1501-APUS-36	Transformer Plug 1501-A Standard USA 36 inches	1

Smart Tek® System
Model: PR931-SMA, PR931-MED, PR931-LAR

5 Motor System Schematic

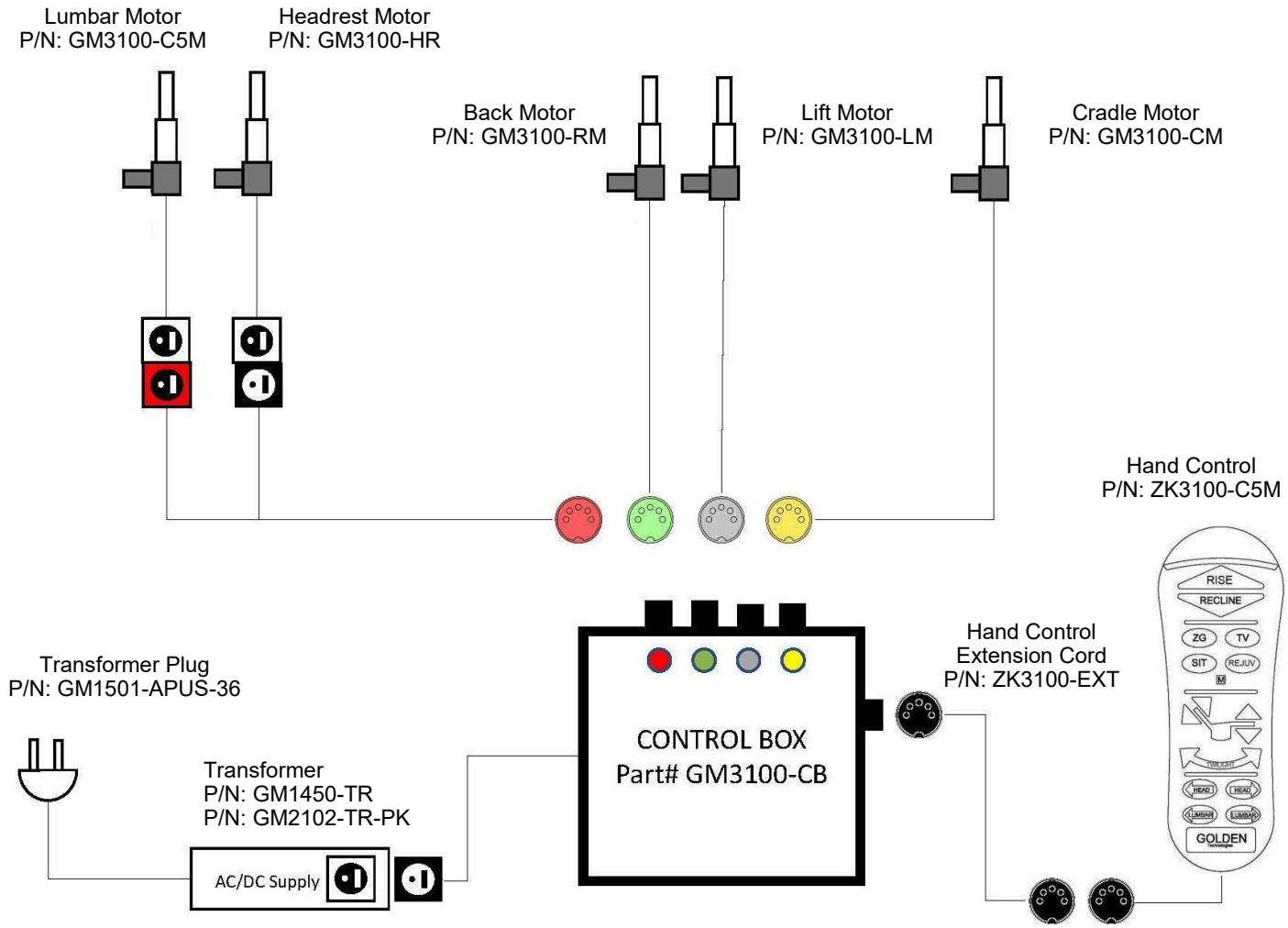

*** Current p/n.**

Item Description	Golden Part Number
Lift motor with Hall Sensor	GM3100-LM
Back motor with Hall Sensor	GM3100-RM
Cradle motor with Hall Sensor	GM3100-CM
Headrest motor and Lumbar Motor Extension Cord	GM3100-HLM-EXT
Hand control extension cord	ZK3100-EXT
Hand control	ZK3100-C5M
Control box	GM3100-CB
Headrest Motor	GM3100-HR
Lumbar Motor	GM3100-C5M
Transformer	GM2102-TR-PK
Transformer	GM1450-TR

Smart Tek® System
Models: PR515-MLA, PR761-MLA

HEAT & MASSAGE ELECTRICAL SETUP – HV3000

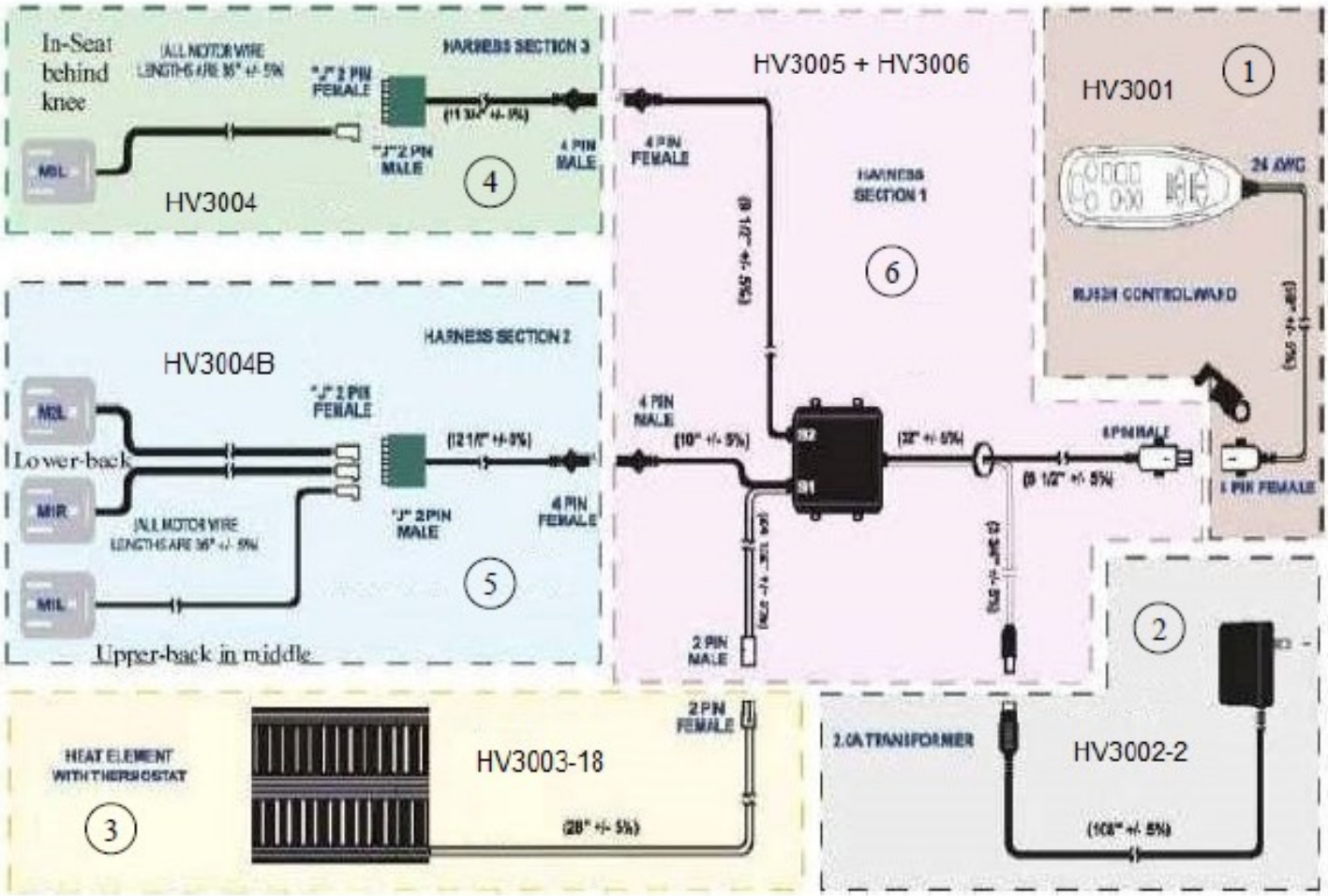

REF #	PART NUMBER	DESCRIPTION	QTY.
1	HV3001	Heat Massage Deluxe Hand Control Relaxor	1
2	HV3002-2	Heat Massage Transformer Relaxor w/Wire	1
3	HV3003-18	Pad, Heat Massage Heating Relaxor 18”	1
4	HV3004	Heat Massage Seat Vibrator M3M4	1
5	HV3004B	Heat Massage Back Set 3 Vibrators M2M1	3
6	HV3005	Heat Massage Control Box Harness Relaxor	1
N/A	HV3006	Heat Massage Harness Cap Gray	1
N/A	HV3008	Heat Massage Vibrator Rubber Pad 3000 Series	1

Models: All except PR200, PR724, PR630, PR712

Note: Used in modified vibrator positions September 2014 – July 2015.
2 vibrators in back
2 vibrators in seat – 1 left and 1 right for zones 2 and 3.

HEAT & MASSAGE ELECTRICAL SETUP – HV3100

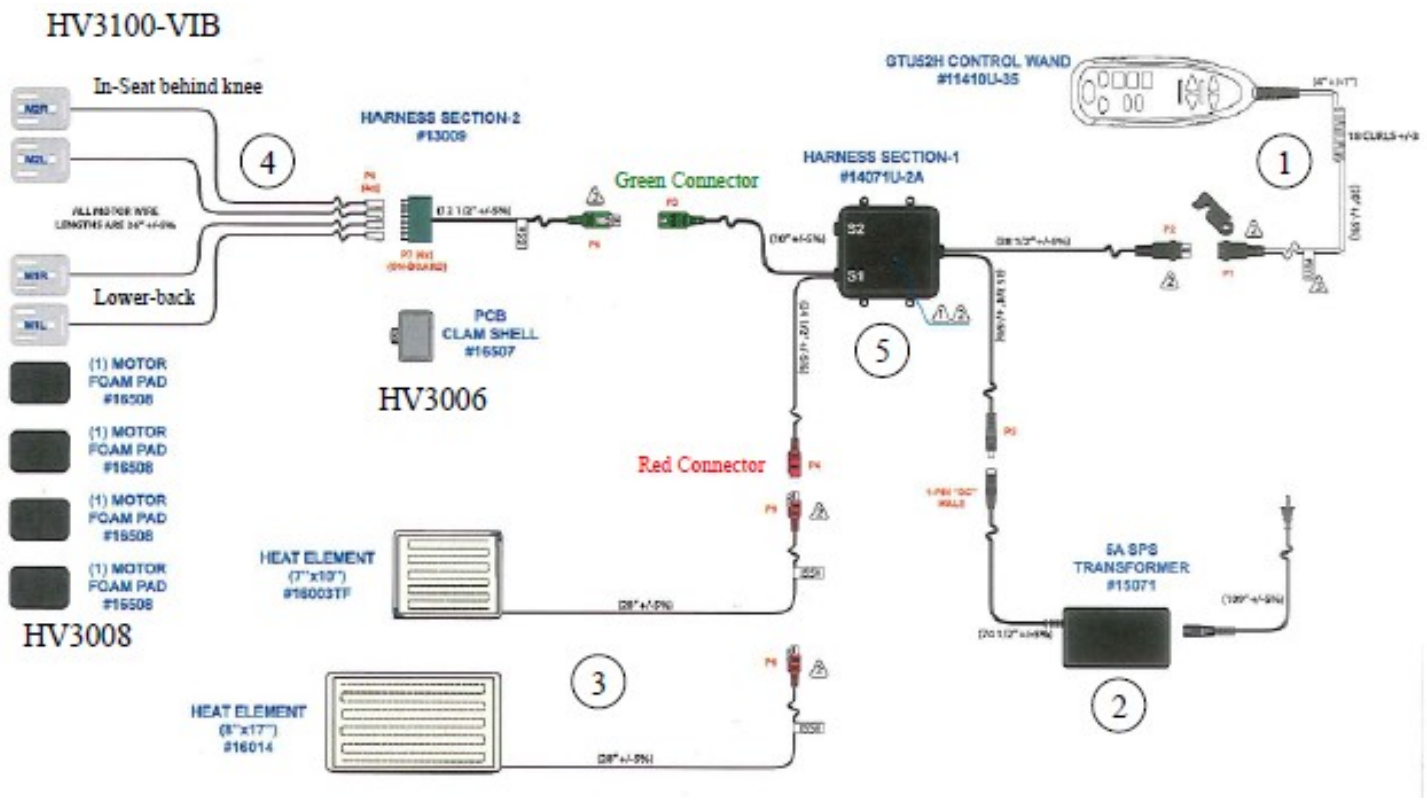

REF #	PART NUMBER	DESCRIPTION	QTY.
1	HV3100-HC	Hand Control or HV3100 Series	1
2	HV3002-2	Heat Massage Transformer Relaxor w/Wire	1
3	HV3003-18	Pad, Heat Massage Heating Relaxor 18”	1
4	HV3100-VIB	Vibrators for HV3100 Series Set of 4	4
5	HV3100-JBOX	Junction Control Box for HV3100 Series	1
N/A	HV3006	Heat Massage Harness Cap Gray	1
N/A	HV3008	Heat Massage Vibrator Rubber Pad 3000 Series	1

Models: Models: All except PR200, PR724

Note: Cut-in July 2015

HEAT & MASSAGE ELECTRICAL SETUP – HV3200

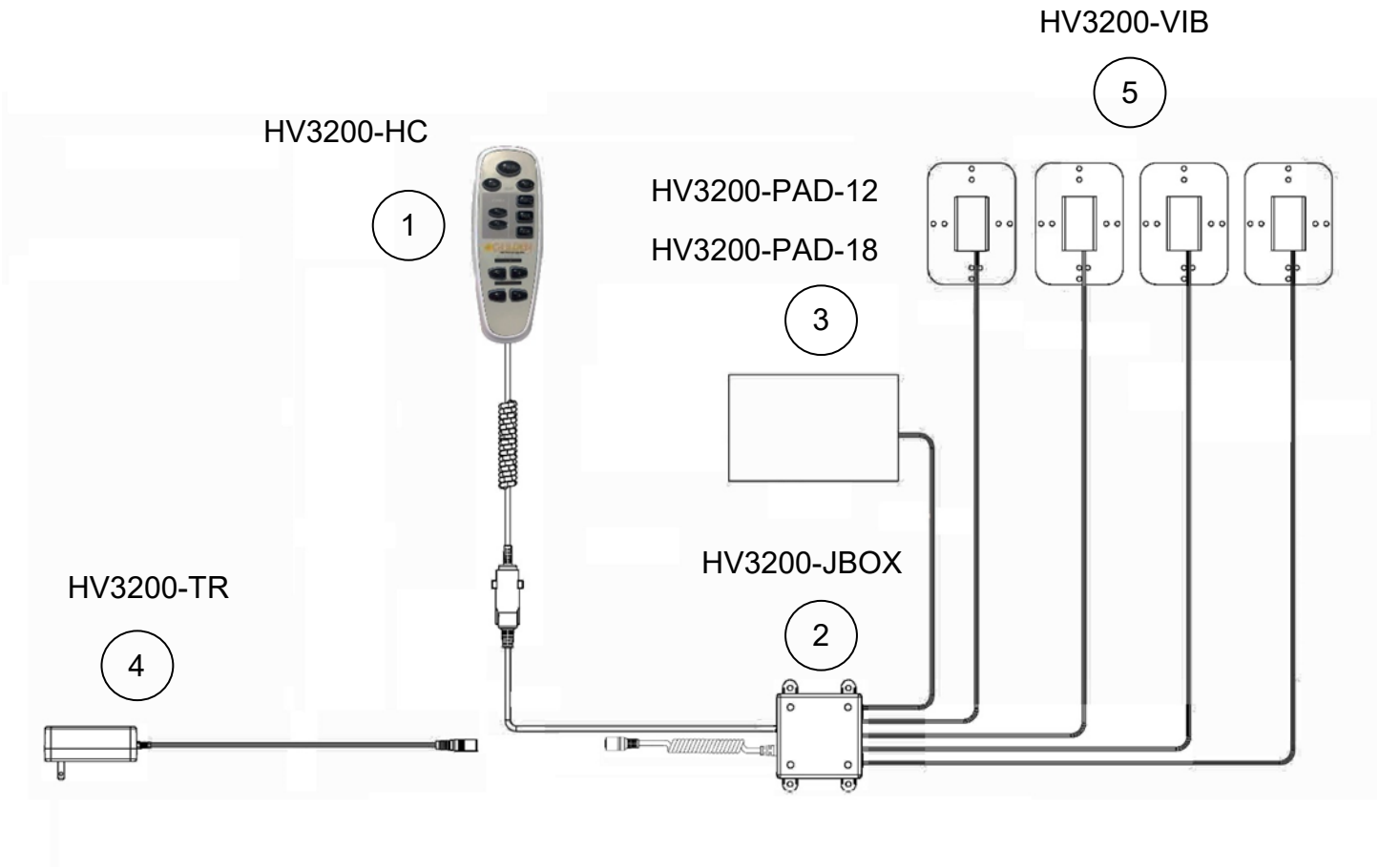

REF #	PART NUMBER	DESCRIPTION	QTY.
1	HV3200-HC	Hand Control for HV3200 Series	1
2	HV3200-JBOX	Junction Control Box for HV3200 Series	1
*3	HV3200-PAD-12	Heat Pad 18 inch for HV3200 Series	1
*3	HV3200-PAD-18	Heat Pad 12 inch for HV3200 Series	1
4	HV3200-TR	Heat Massage Transformer HV3200 Series	1
5	HV3200-VIB	Massage Motor Vibrator for HV3200 Series	4

Models: Models: All except PR200, PR724

Note: Cut-in October 2019

HEAT and MASSAGE ELECTRICAL SETUP – HV4200

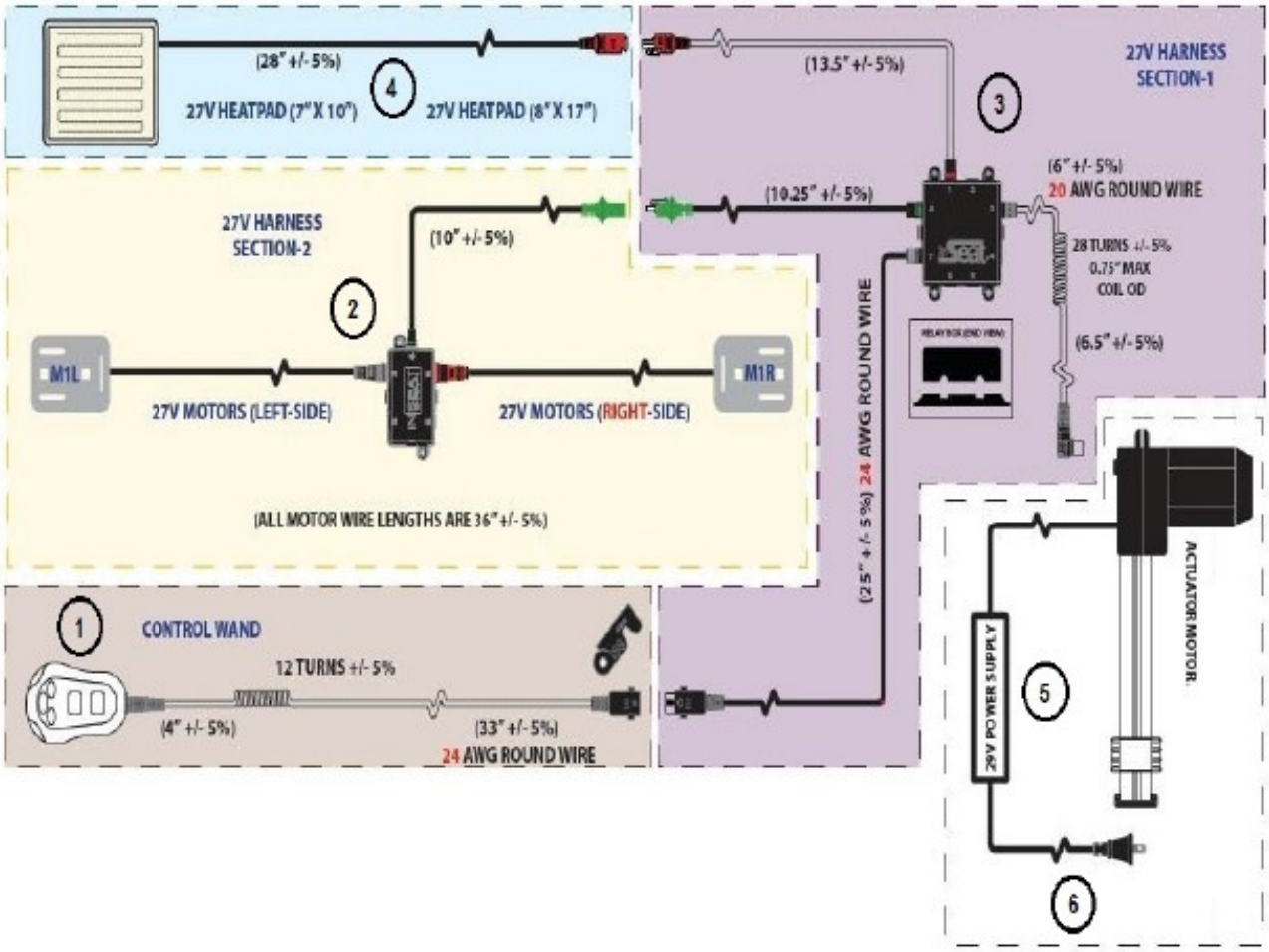

REF #	PART NUMBER	DESCRIPTION	QTY.
1	HV4200-HC	Hand Control for HV4200 Series	1
2	HV4200-VIB	Massage Motor Vibrator for HV4200 Series	2
3	HV4200-JBOX	Junction Control Box for HV4200 Series	1
4*	HV4200-PADS	Heat Pad Small for HV4200 Series (12 inch)	1
5	GM2000-TR	Chair Motor Transformer 2000	1
6	GM1501-APUS-36	Transformer Plug 1501-A Standard USA 36 inches	1
7	GM1500-LM	Motor Chair Okin Maxi Lift Motor	1

Models: PL340, PR480, PR522, PR524

Note: One heating pad required for Item 4, two sizes available.

Note: Cut-in 4/24/15 with PL1504F2S06085

HEAT and MASSAGE ELECTRICAL SETUP – HV4100

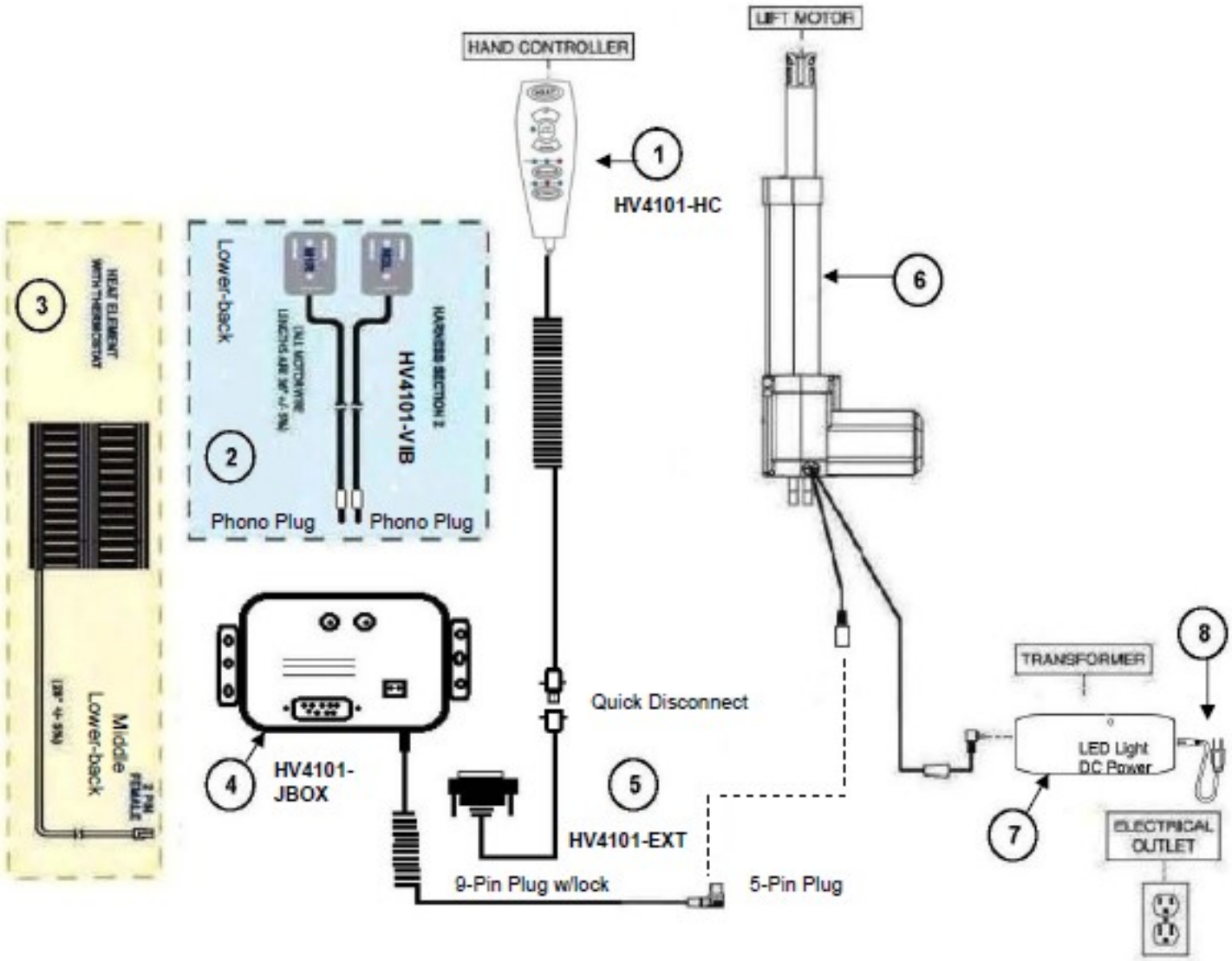

REF #	PART NUMBER	DESCRIPTION	QTY.
1	HV4101-HC	Hand Control for HV4101 Series	1
2	HV4101-VIB	Massage Motor Vibrator for HV4101 Series	2
3	HV4101-PAD	Heat Unit	1
4	HV4101-JBOX	Junction Control Box for HV4101 Series	1
5	HV4101-EXT	Extension 28 inch for HV4101 Series	1
6	GM1500-LM	Motor Chair Okin Maxi Lift Motor	1
7	GM2000-TR	Chair Motor Transformer 2000	1
8	GM1501-APUS-36	Transformer Plug 1501-A Standard USA 36 inches	1

Model: PR480, PL340

Note: The above drawing is for units manufactured between May 2012 and April 2015.

HEAT and MASSAGE ELECTRICAL SETUP – HV4100

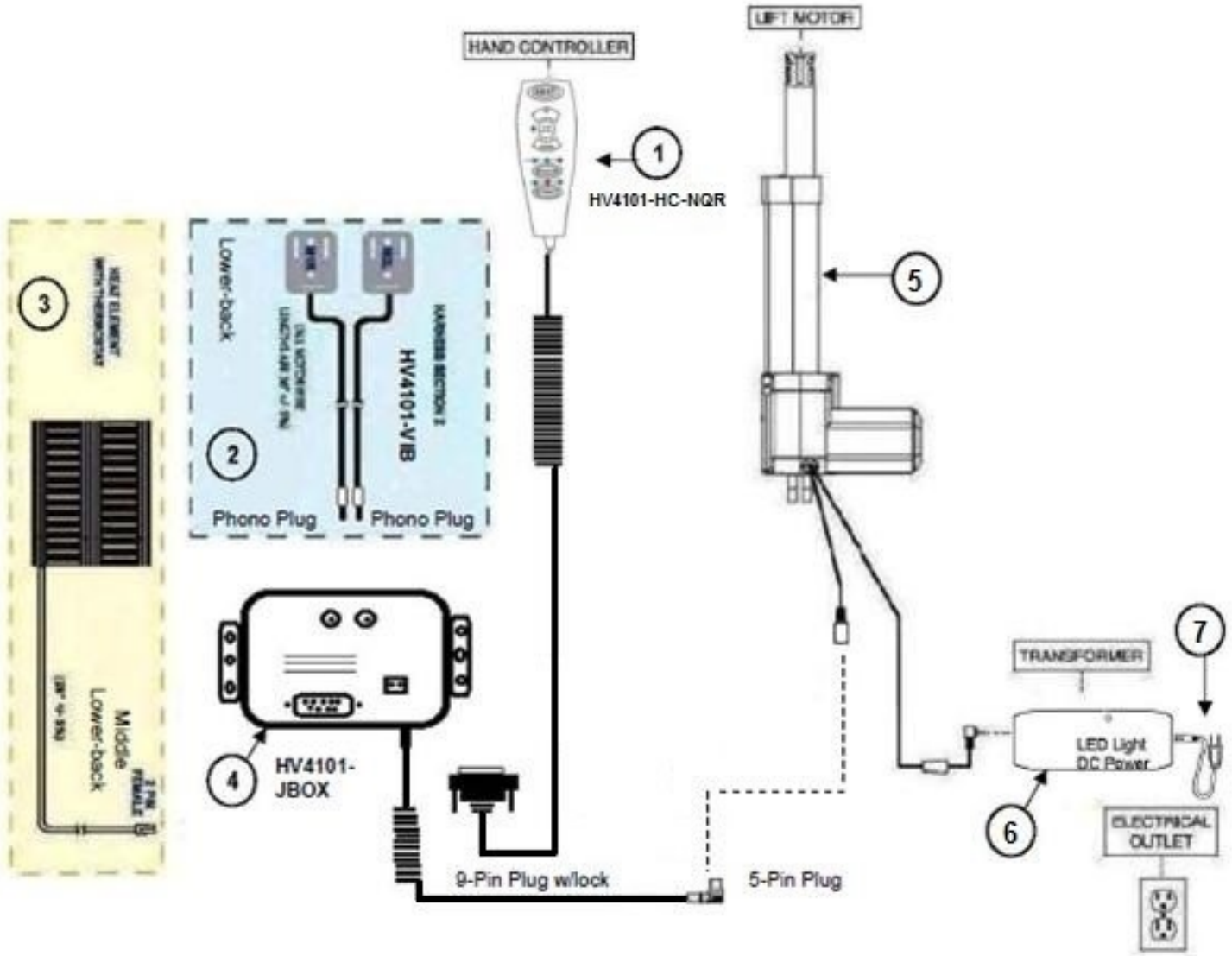

REF #	PART NUMBER	DESCRIPTION	QTY.
1	HV4101-HC-NQR	Hand Control for HV4101 Non Quick Release	1
2	HV4101-VIB	Massage Motor Vibrator for HV4101 Series	2
3	HV4101-PAD	Heat Unit	1
4	HV4101-JBOX	Junction Control Box for HV4101 Series	1
5	GM1500-LM	Motor Chair Okin Maxi Lift Motor	1
6	GM2000-TR	Chair Motor Transformer 2000	1
7	GM1501-APUS-36	Transformer Plug 1501-A Standard USA 36 inches	1

Model: PR480, PL340

Note: The above drawing is for units manufactured after August 2016 to the present time.

HV4101-HC-NQR INSTALLATION

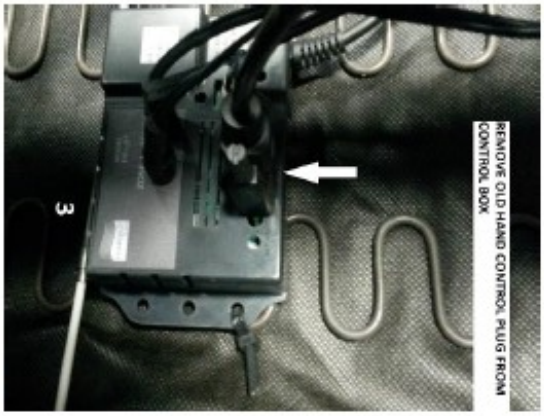

HV4101-HC-NQR INSTALLATION

HEAT and MASSAGE ELECTRICAL SETUP – HV4000

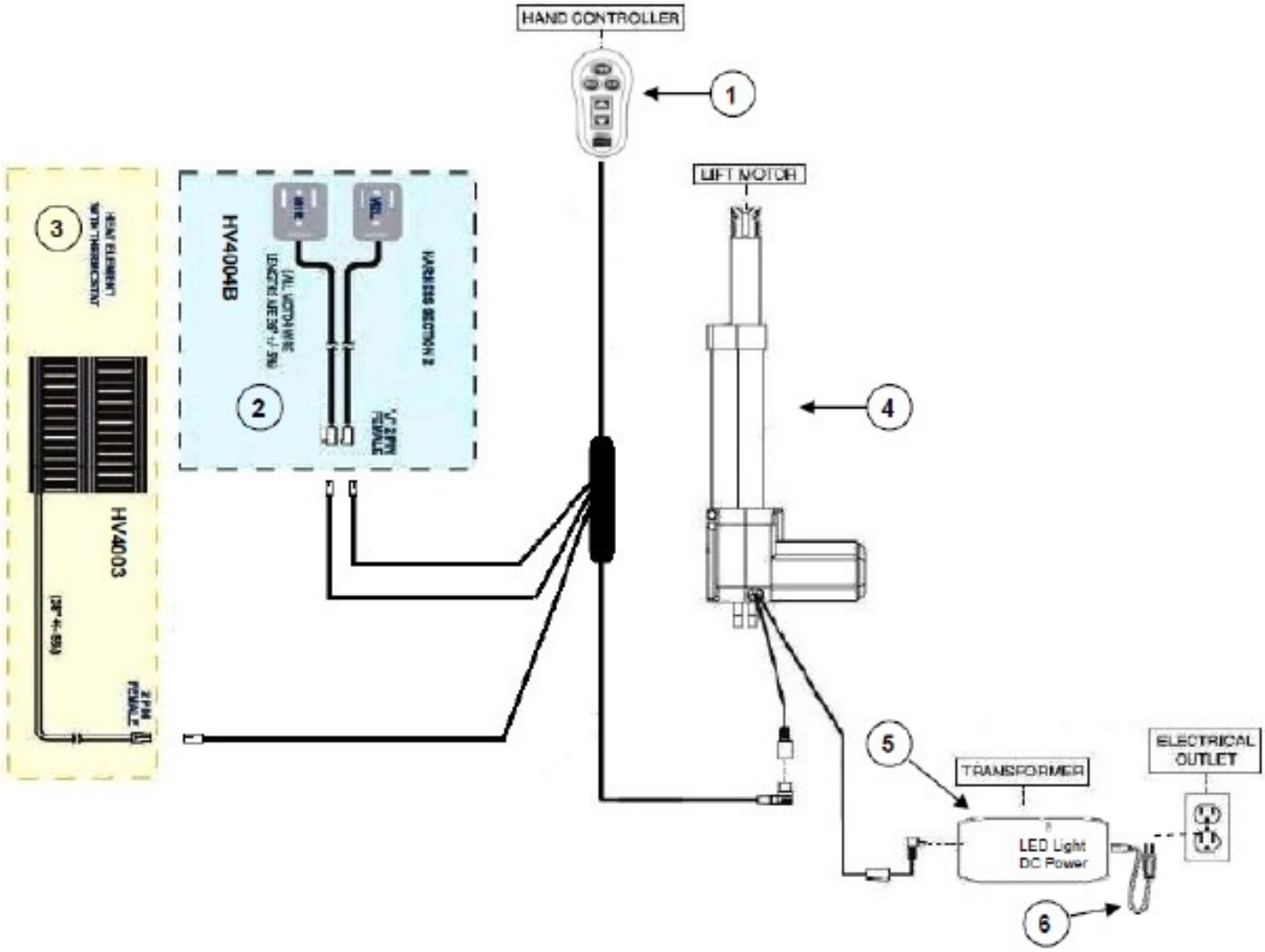

REF #	PART NUMBER	DESCRIPTION	QTY.
1	HV4001	Hand Control, Heat Massage and Lift STRAIGHT CORD with Wire Harness	1
2	HV4004B	Massage Back 2 3 HV4003 Heat Unit	2
3	HV4003	Heat Unit	1
4	GM1500-LM	Motor Chair Okin Maxi Lift Motor	1
5	GM2000-TR	Chair Motor Transformer 2000	1
6	GM1501-APUS-36	Transformer Plug 1501-A Standard USA 36 inches	1

Model: PR480, PL340

Note: The above drawing is for units manufactured prior to May 2012.

Trouble Shooting with Smart Tek®

Models: Capri, 355M, 355L, 359M, 359L, 501JP, 501S, 501M, 501L, 501T, 501S-23, 510, 505L, 505M, 505S, 505JP, 506, 756L, 756MC, 451, 410, 643, 747, 751TY, 752, 401L, 401, 906, 401-SME, 401-MLA, 722, 724, 630, 712, 510-SME, 510-MLA, 508M, PR404

Problem:	Solution:
Chair doesn't work, both LED lights are off.	1. Check right angle plug is connected to the transformer. 2. Check the plug end of the transformer is plugged into the wall outlet. 3. Check the fuse or breaker to the wall outlet the chair is plugged into. If all above are ok, defective transformer replace it.
Chair doesn't work, both LED lights are on.	1. Defective motor replace it.
Chair motor runs in one direction, both lights are on.	1. Defective hand control, replace it.
Chair doesn't work; LED on hand control is off.	1. Check the quick release connector is plugged in and locked in the chair pocket. 2. Check the extension from the pocket is connected to the motor. If all above are ok, defective hand control or extension wire, extension wire rarely goes bad, replace hand control.

Models: 501M26D, 501L26, 501T28

Problem:	Solution:
Chair doesn't work, both LED lights are off.	1. Check right angle plug is connected to the transformer. 2. Check the plug end of the transformer is plugged into the wall outlet. 3. Check the fuse or breaker to the wall outlet the chair is plugged into. If all above are ok, defective transformer replace it.
Chair doesn't work, both LED lights are on.	1. Check motors are plugged into the control box. If all above are ok, defective control box or motors, both motors rarely go bad, replace the control box.
Chair motor runs in one direction, both lights are on.	1. Defective hand control, replace it.
Chair doesn't work; LED on hand control is off.	1. Check the quick release connector is plugged in and locked in the chair pocket. 2. Check the extension from the pocket is connected to the control box. If all above are ok, defective hand control or extension wire or control box, extension wire rarely goes bad, replace control box and hand control, replace hand control first, if problem is resolved send control box back.

Model: 502

Problem:	Solution:
Chair doesn't work, both LED lights are off.	1. Check right angle plug is connected to the transformer. 2. Check the plug end of the transformer is plugged into the wall outlet. 3. Check the fuse or breaker to the wall outlet the chair is plugged into. If all above are ok, defective transformers replace both.
Chair doesn't work, both LED lights are on.	1. Check motors are plugged into the control box. If all above are ok, defective control box or motors, both motors rarely go bad, replace control box.
Chair motor(s) run in one direction, both lights are on.	1. Defective hand control, replace it.
Chair doesn't work; LED on hand control is off.	1. Check the quick release connector is plugged in and locked in the chair pocket. 2. Check the extension from the pocket is connected to the control box. If all above are ok, defective hand control or extension wire or control box, extension wire rarely goes bad, replace control box and hand control, replace hand control first, if problem is resolved send control box back.
Chair works but slowly, hand control light is on and one of the Y connector lights is off.	1. Check right angle plug is connected to the transformer. 2. Check plug end of the transformer is plugged into the wall outlet. 3. Check power to the socket on the wall outlet the chair is plugged into. If all above are ok, defective transformer replace it.

LM5100 LIFT FRAME ASSEMBLY

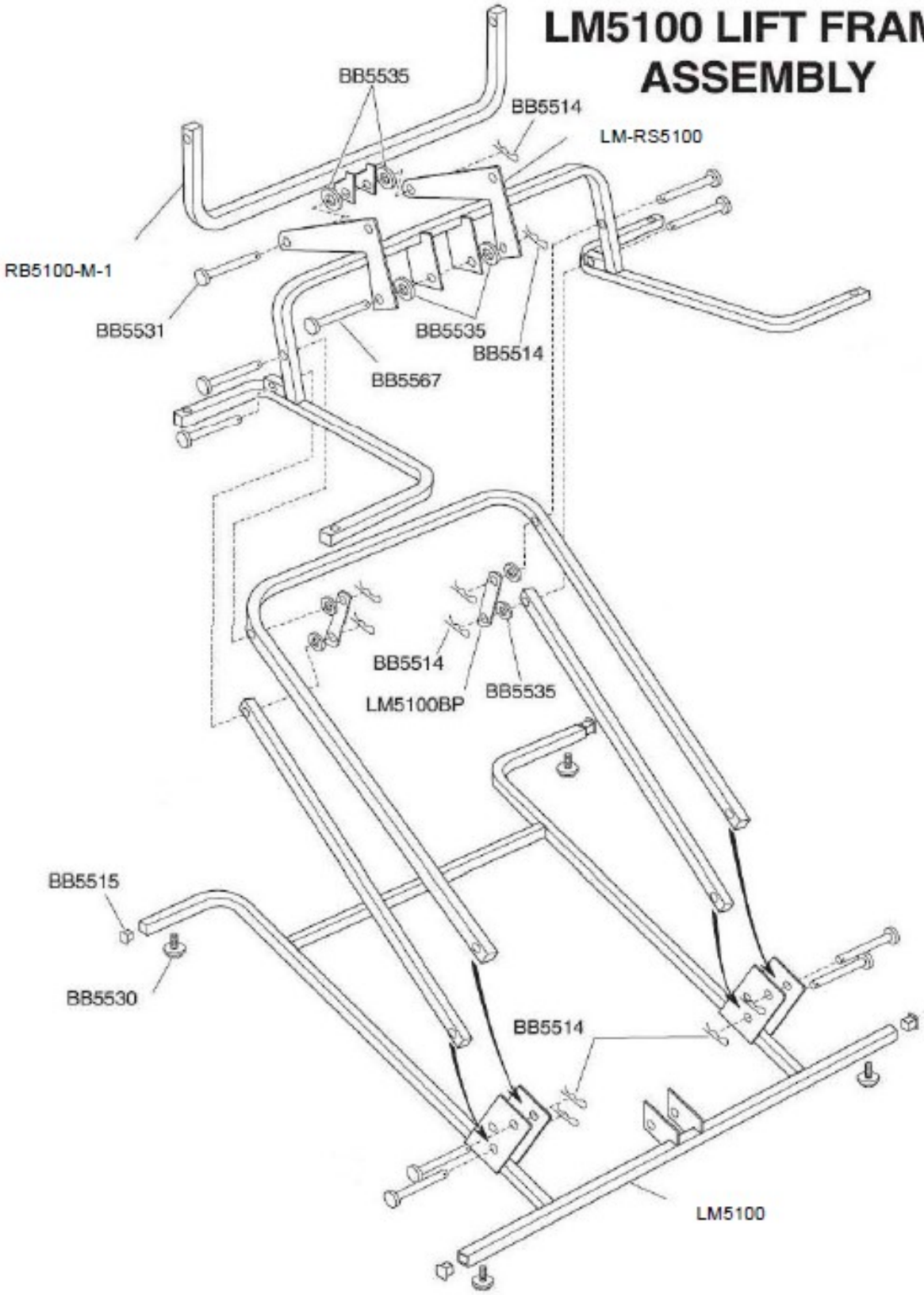

For use in models: PR118-MED, PR202-MED, PR401-SME, PR643, PR752, PR451, PR508M, PR505JP, PR505S, PR505M, PR510-SME, PR501JP, PR501S, PR501M, PR355M, PR359M, PR404, PR535-PSA, PR535-M

See parts list for specific parts by model.

LM5100 LIFT MOTOR

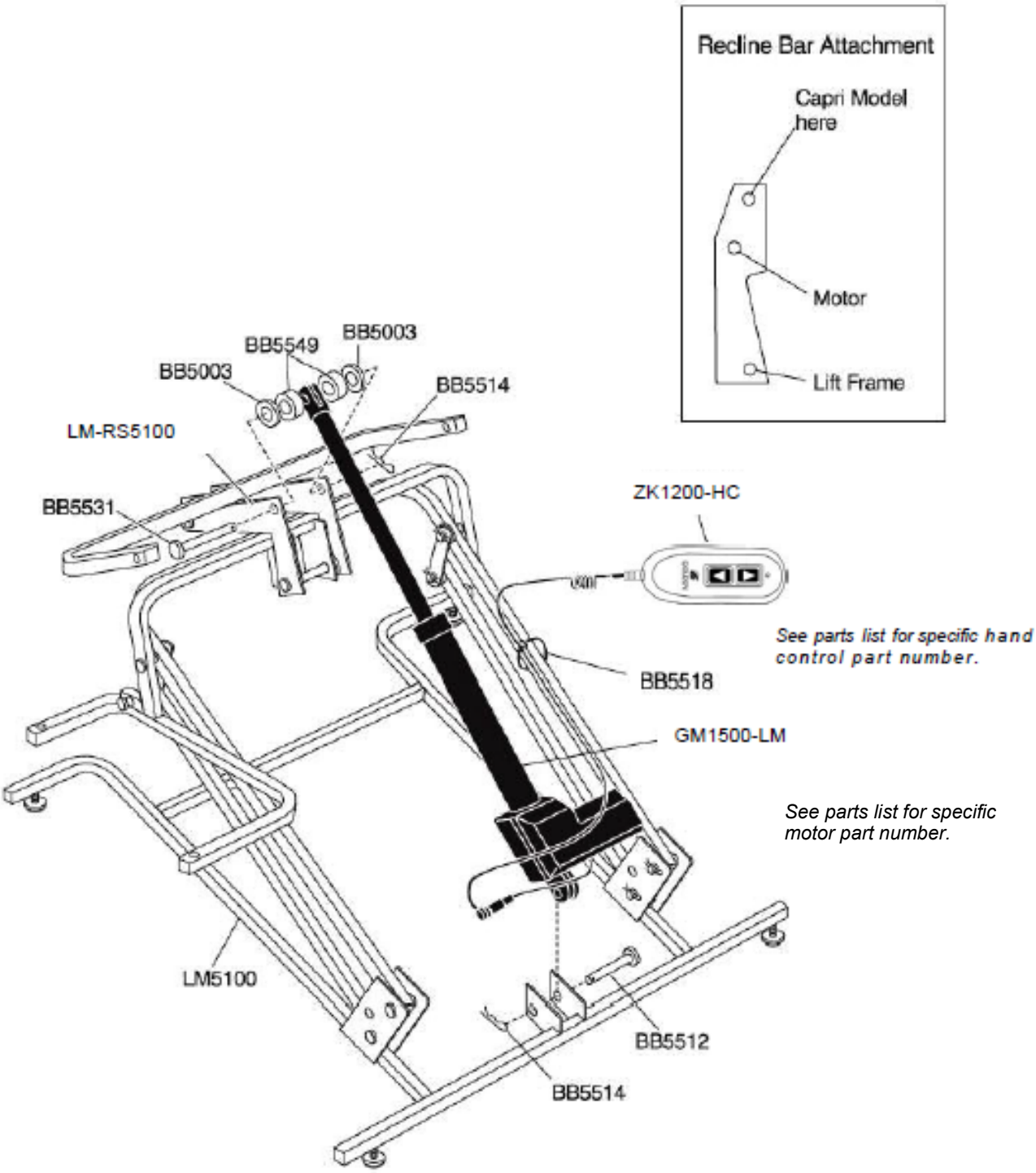

LM5100 LIFT FRAME PARTS LIST

Part Number	Description	Qty. Per Unit
BB5003	Washer, 380 x 750 x 062 Nylon	2
BB5512	Pin, 3/8 x 1 5/8 Zinc Clevis	1
BB5514	Pin, Bow Shaft 72 1/4 Hitch Pin	11
BB5515	Cap, 1" Square End Cap 10-14 Gauge Black	8
BB5518	Tywrap, 8" Black	2
BB5530	Leg Leveler 5/16 X 7/8	4
BB5531	Pin, 3/8 x 2 1/2 Zinc Clevis Spec.369/.371	1
BB5535	Washer, 750 x 394 x 125 Nylon	6
BB5549	Washer, 400 x 750 x 312 Nylon	2
BB5567	Pin, 3/8 X 2 5/8 Zinc Clevis	1
GM1500-LM	Motor Chair Okin Maxi Lift Motor	1
GM1400-LM	Chair Lift Motor 1400	1
GM1410-LM	Chendi Lift Motor 1410	1
GM1450-LM-ORG	Chair Lift Motor 1450 Original ending 355	1
LM5100	LM5100 Lift Frame	1
LM-RS5100	Recline Motor Strap for Lift Frame Series 5100	2
ZK1200-HC	Hand Wand, 2 Button LED Gold with Walnut Burl Grain	1
ZKAD-1	Hand Wand Auto Drive for Lift Chairs	1
ZKAD-5	Hand Wand Faster Auto Drive UP and M button	1
ZK404-HC	Hand Wand Two Button with Lumbar and Headrest	1

Note: Refer to “Models Quick Reference” chart for correct hand control by model.

RECLINE BARS FOR 5100 LIFT FRAME

RB5100-M-1	Recline Bar 5100 Med W Bushing	1

RECLINE MECHANISMS FOR 5100 LIFT FRAME

RM620L	Recline Mech Maxi Comfort Left Side Sit	1
RM622R	MAXICOMFORT MECHANISM RIGHT SIDE	1
RM621L	Recline Mech 3 Way Left Side Sit	1
RM621R	Recline Mech 3 Way Right Side Sit	1
RM8300L	Recline Mech 2 Way Left Side Sit	1
RM8300R	Recline Mech 2 Way Right Side Sit	1

LEFT AND RIGHT IS DETERMINED BY SITTING IN CHAIR

TRANSFORMER FOR 5100 LIFT FRAME

GM2000-TR	Chair Motor Transformer 2000	1
GM1400-TR	Chair Transformer 1400	1
GM1410-TR	Chair Transformer 1410	1
GM1501-APUS-36	Transformer Plug 1501-A Standard USA 36 inches	1

CALL TECHNICAL SERVICE FOR FABRIC, FOAM, SPRING AND WOOD PART NUMBERS AND PRICING

LM5120 LIFT FRAME

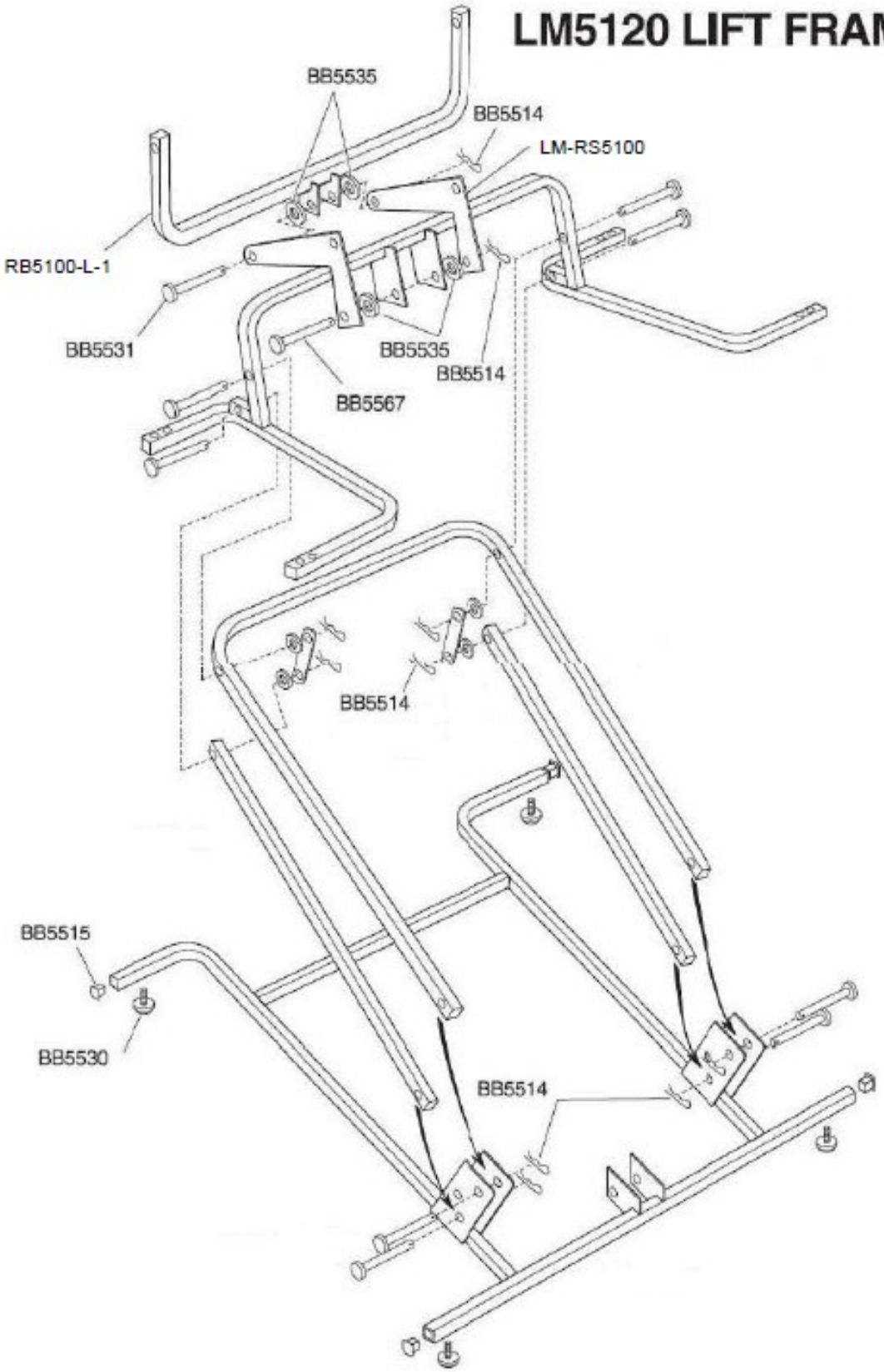

For use in models: PR401MLA, PR410, PR446-MED, PR446-LAR, PR747, PR751, PR751TY, PR510-MLA, PR512-MLA, PR756MC, PR756M, PR505L, PR501L, PR501T, PR501-S23, PR355L, PR359L, PR-505TAL, PR630, PR631, PR632, PR713, PR535-L, PR535-T
See parts list for specific parts by model.

LM5120 LIFT MOTOR ASSEMBLY

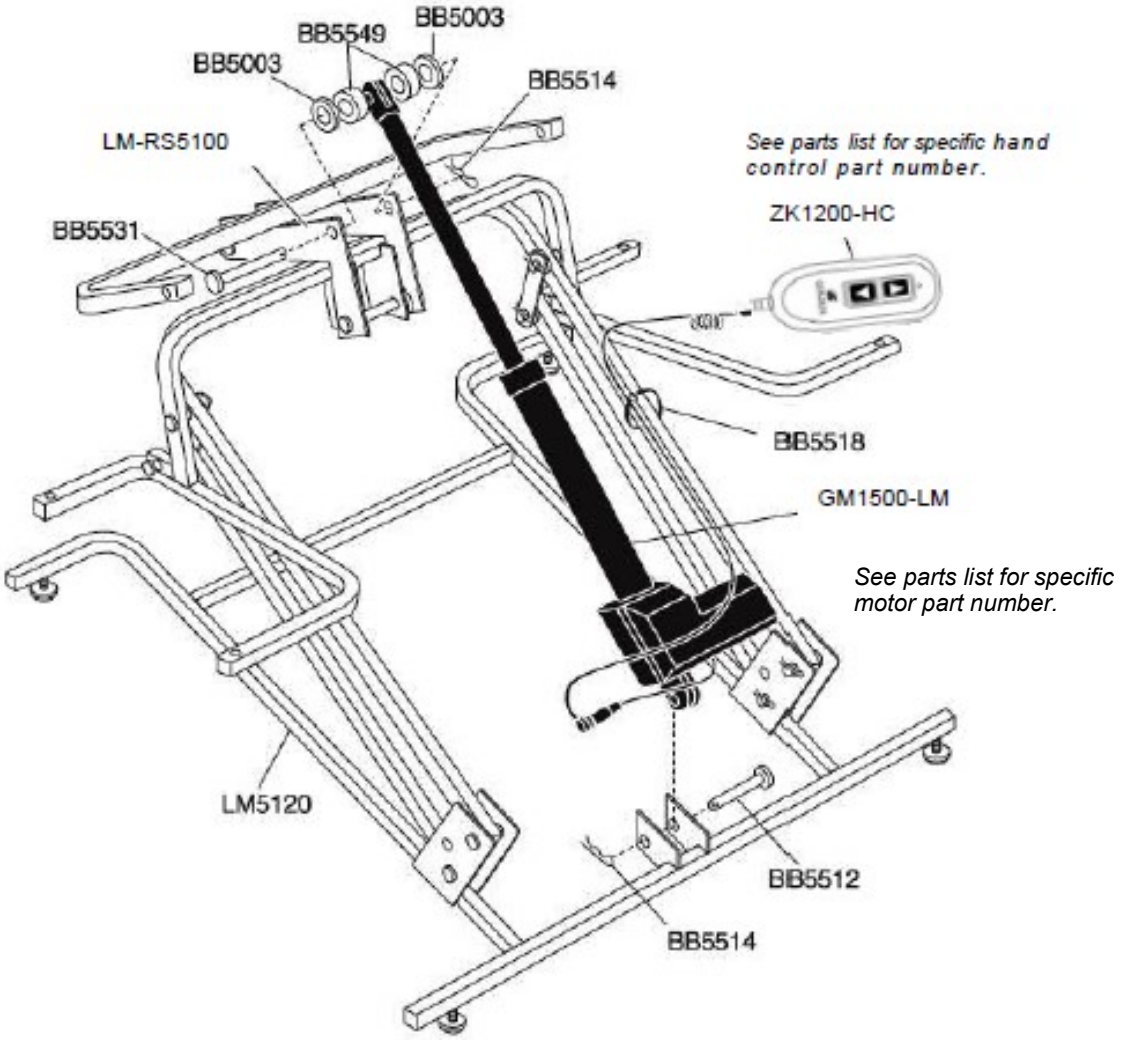

LM5120 LIFT FRAME PARTS LIST

Part Number	Description	Qty. Per Unit
BB5003	Washer, 380 x 750 x 062 Nylon	2
BB5512	Pin, 3/8 x 1 5/8 Zinc Clevis	1
BB5514	Pin, Bow Shaft 72 1/4 Hitch Pin	11
BB5515	Cap, 1" Square End Cap 10-14 Gauge Black	8
BB5518	Tywrap, 8" Black	2
BB5530	Leg Leveler 5/16 X 7/8	4
BB5531	Pin, 3/8 x 2 1/2 Zinc Clevis Spec.369/.371	1
BB5535	Washer, 750 x 394 x 125 Nylon	6
BB5549	Washer, 400 x 750 x 312 Nylon	2
BB5567	Pin, 3/8 X 2 5/8 Zinc Clevis	1
GM1500-LM	Motor Chair Okin Maxi Lift Motor	1
GM1400-LM	Chair Lift Motor 1400	1
GM1450-LM-ORG	Chair Lift Motor 1450 Original ending 355	1
LM5120	Lm5120 Lift Frame	1
LM-RS5100	Recline Motor Strap for Lift Frame Series 5100	2
ZKAD-1	Hand Wand Auto Drive for Lift Chairs	1
ZK1200-HC	Hand Wand, 2 Button LED Gold with Walnut Burl Grain	1
ZKAD-5	Hand Wand Faster Auto Drive UP and M button	1
ZKAD-HR-1	Hand Wand Fast Auto Drive Head Rest Up and M Button	1

Note: Refer to “Models Quick Reference” chart for correct hand control by model.

RECLINE BARS FOR 5120 LIFT FRAME

RB5100-M-1	Recline Bar Med W Bushing	1
RB5100-L-1	Recline Bar 5100 Large W Bushing	1

RECLINE MECHANISMS FOR 5120 LIFT FRAME

RM620L	Recline Mech Maxi Comfort Left Side Sit	1
RM620R	Recline Mech Maxi Comfort Right Side Sit	1
RM621L	Recline Mech 3 Way Left Side Sit	1
RM621R	Recline Mech 3 Way Right Side Sit	1

LEFT AND RIGHT IS DETERMINED BY SITTING IN CHAIR

TRANSFORMER FOR 5120 LIFT FRAME

GM2000-TR	Chair Motor Transformer 2000	1
GM1450-TR	Chair Transformer 1450	1
GM1501-APUS-36	Transformer Plug 1501-A Standard USA 36 inches	1

CALL TECHNICAL SERVICE FOR FABRIC, FOAM, SPRING AND WOOD PART NUMBERS AND PRICING

LM6111 LIFT FRAME

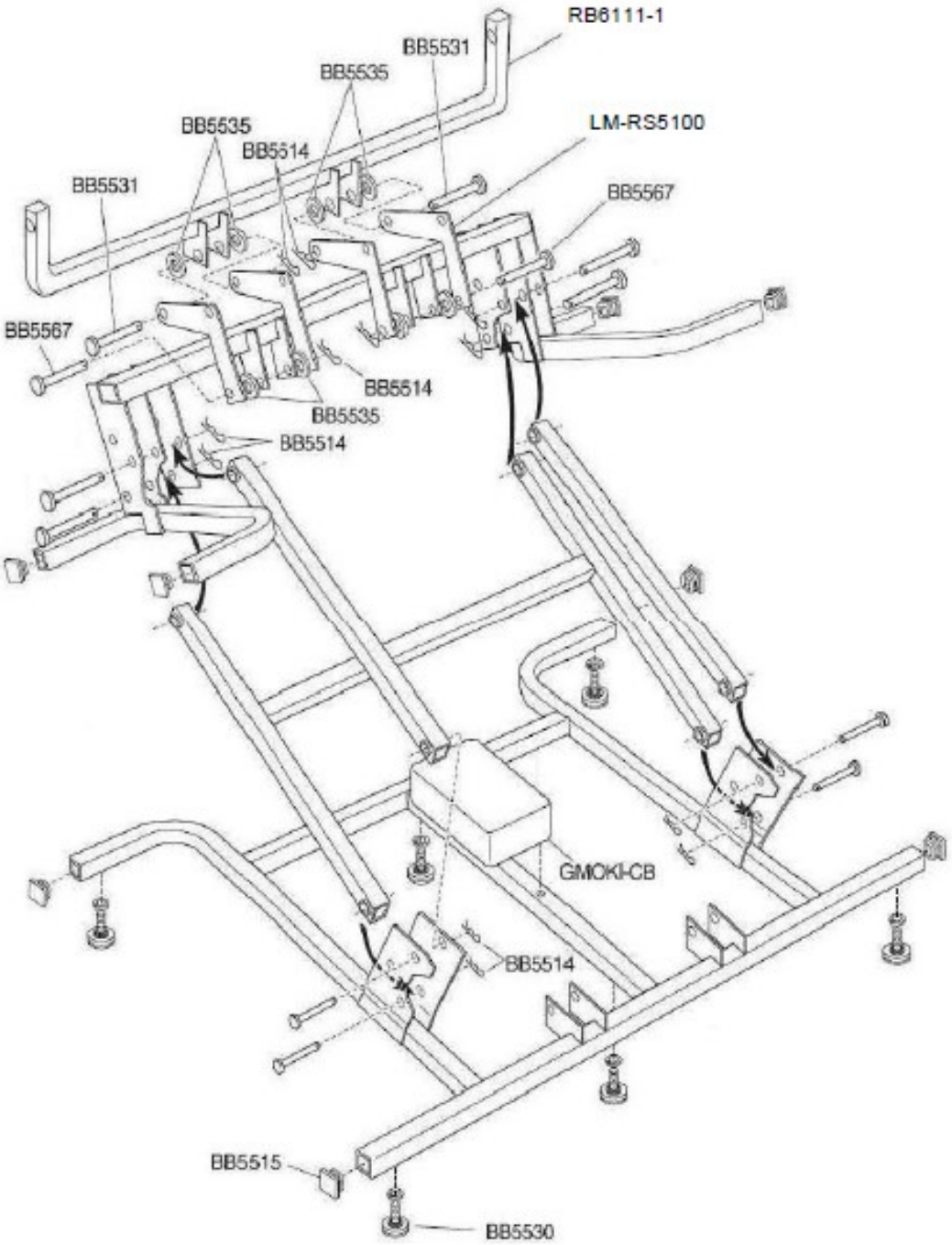

For use in models: PR501-M26, PR501L-26, PR501-LR6, PR501-T28, PR505-M26, PR535-M26

See parts list for specific parts by model.

LM6111 LIFT MOTOR

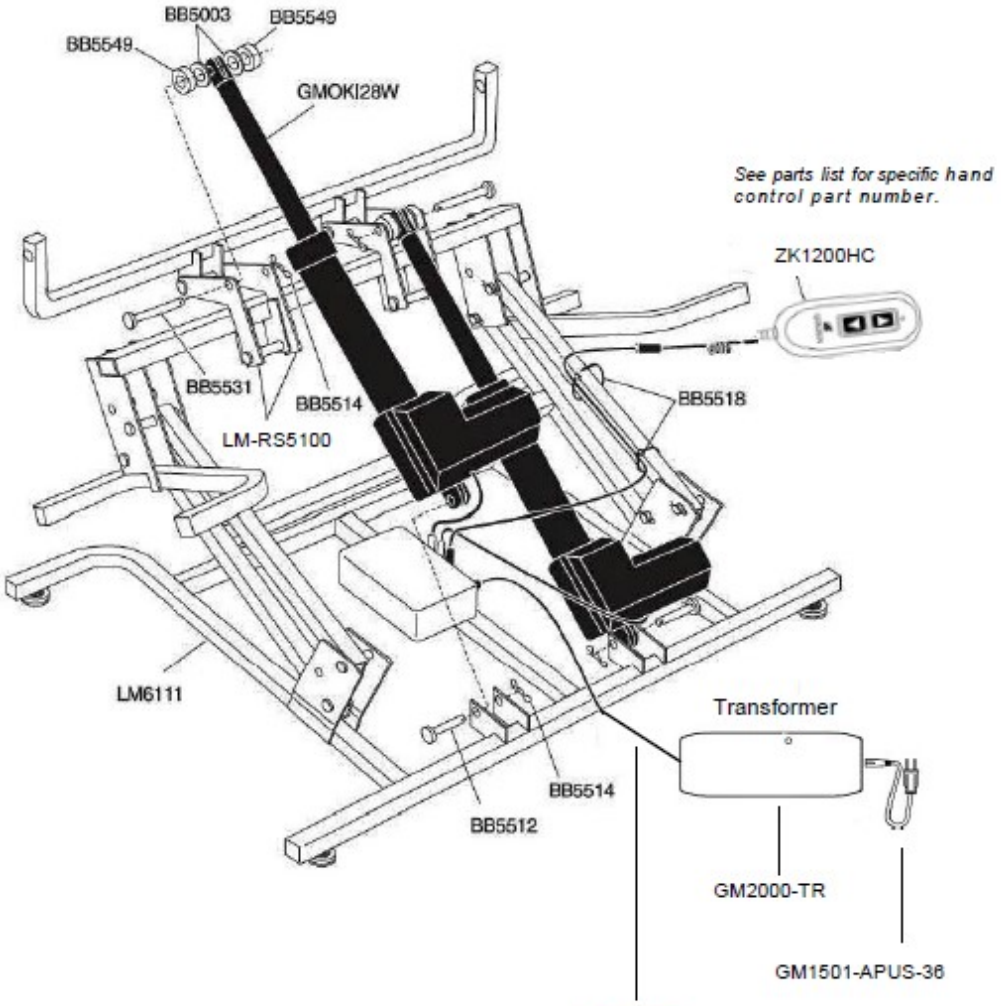

GM1502L-B

LM6111 LIFT FRAME PARTS LIST

Part Number	Description	Qty. Per Unit
BB5003	Washer, 380 x 750 x 062 Nylon	4
BB5512	Pin, 3/8 x 1 5/8 Zinc Clevis	2
BB5514	Pin, Bow Shaft 72 1/4 Hitch Pin	13
BB5515	Cap, 1" Square End Cap 10-14 Gauge Black	8
BB5518	Tywrap, 8" Black	2
BB5530	Leg Leveler 5/16 X 7/8	6
BB5531	Pin, 3/8 x 2 1/2 Zinc Clevis Spec.369/.371	2
BB5535	Washer, 750 x 394 x 125 Nylon	4
BB5549	Washer, 400 x 750 x 312 Nylon	4
BB5567	Pin, 3/8 X 2 5/8 Zinc Clevis	2
GMOKI-28W	Motor Chair Okin 26-28 Wide Motor	2
GMOKI-CB	Motor Chair Okin 26-28Wide Control Box 4/2003	1
GM1502L-B	Motor Chair Battery Back Up Wire for GM1501-B with LED	1
LM6111	Dual Motor Lift Frame	1
LM-RS5100	Recline Motor Strap for Lift Frame Series 5100	2
ZK1200-HC	Hand Wand, 2 Button LED Gold with Walnut Burl Grain	1
ZK756HCL	Hand Wand for Maxi Comfort LED	1

Note: Refer to “Models Quick Reference” chart for correct hand control by model.

RECLINE BARS FOR 6111 LIFT FRAME

RB6111-1	Recline Bar 6111 Dual Motor W Bushing	1

RECLINE MECHANISMS FOR 6111 LIFT FRAME

RM622L	Recline Mech Left Side HD Maxi	1
RM622R	Recline Mech Right Side HD Maxi	1

LEFT AND RIGHT IS DETERMINED BY SITTING IN CHAIR

TRANSFORMER FOR 6111 LIFT FRAME

GM2000-TR	Chair Motor Transformer 2000	1
GM1501-APUS-36	Transformer Plug 1501-A Standard USA 36 inches	1

CALL TECHNICAL SERVICE FOR FABRIC, FOAM, SPRING AND WOOD PART NUMBERS AND PRICING

LM5000C LIFT FRAME ASSEMBLY

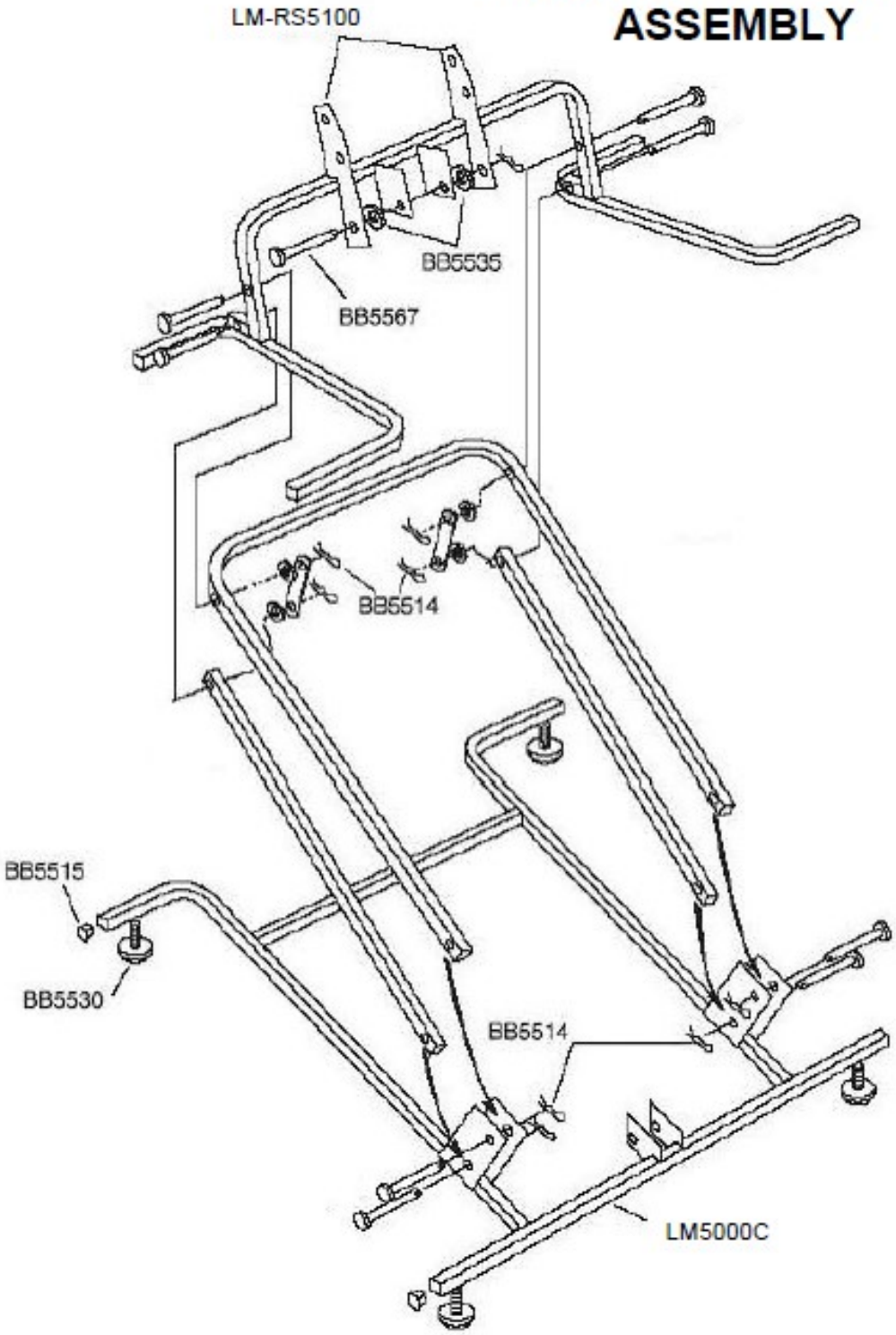

For use in model: PR200
See parts list for specific parts by model.

LM5000C LIFT MOTOR

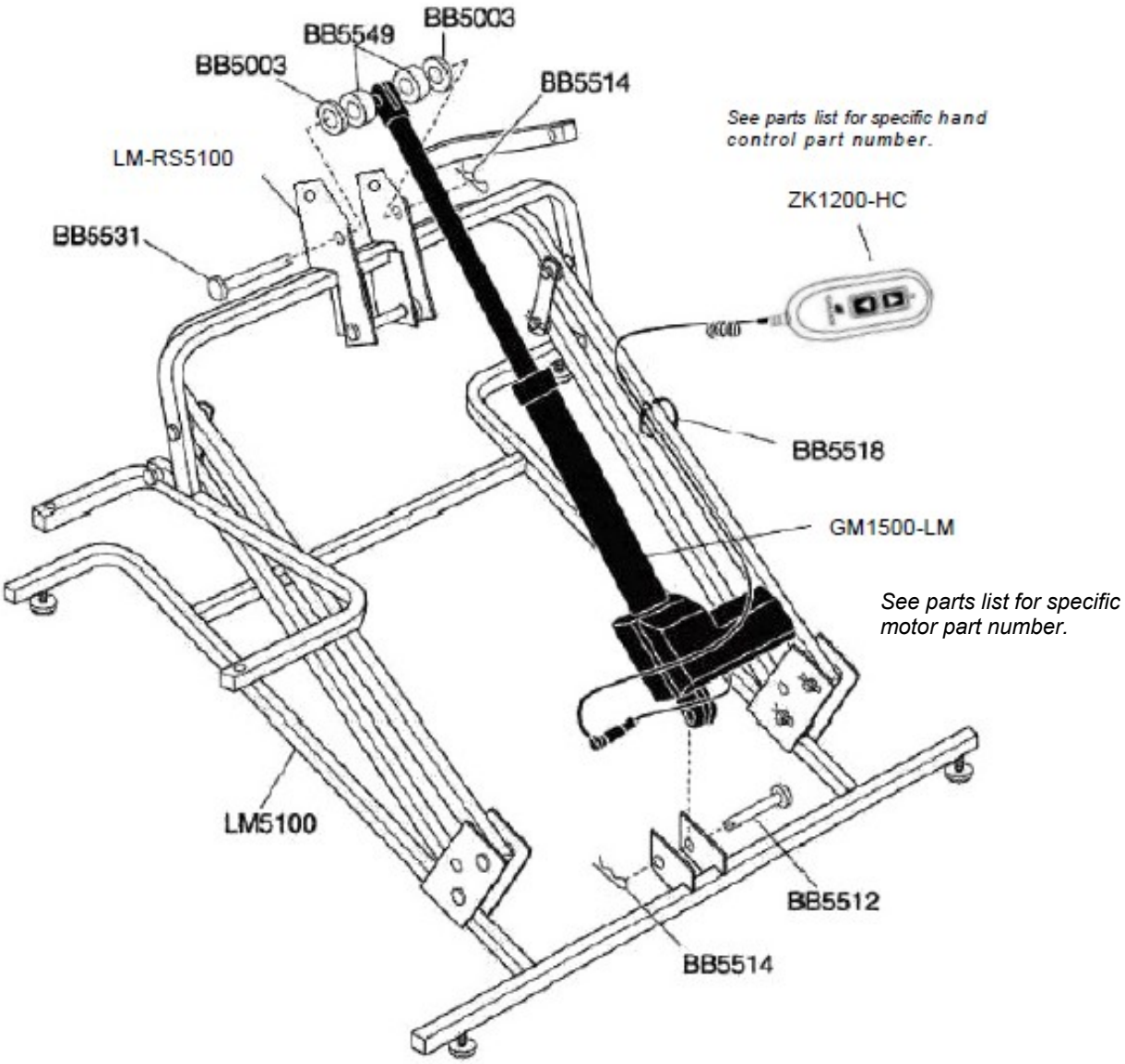

LM5000C LIFT FRAME PARTS LIST

Part Number	Description	Qty. Per Unit
BB5003	Washer, 380 x 750 x 062 Nylon	2
BB5512	Pin, 3/8 x 1 5/8 Zinc Clevis	1
BB5514	Pin, Bow Shaft 72 1/4 Hitch Pin	11
BB5515	Cap, 1" Square End Cap 10-14 Gauge Black	8
BB5518	Tywrap, 8" Black	2
BB5530	Leg Leveler 5/16 X 7/8	4
BB5531	Pin, 3/8 x 2 1/2 Zinc Clevis Spec.369/.371	1
BB5535	Washer, 750 x 394 x 125 Nylon	6
BB5549	Washer, 400 x 750 x 312 Nylon	2
BB5567	Pin, 3/8 x 2 5/8 Zinc Clevis	1
GM1500-LM	Motor Chair Okin Maxi Lift Motor	1
GM1400-LM	Chair Lift Motor 1400	1
GM1410-LM	Chendi Lift Motor 1410	1
LM5000C	Square Tube Frame for Capri	1
LM-RS5100	Recline Motor Strap for Lift Frame Series 5100	2
ZK1200-HC	Hand Wand, 2 Button LED Gold with Walnut Burl Grain	1

Note: Refer to “Models Quick Reference” chart for correct hand control by model.

RECLINE BAR FOR 5000C LIFT FRAME

RB4000-CB	Recline Bar Capri 5/16 Bolt	1

RECLINE MECHANISMS FOR 5100 LIFT FRAME

RM8300L	Recline Mech 2 Way Left Side Sit	1
RM8300R	Recline Mech 2 Way Right Side Sit	1

LEFT AND RIGHT IS DETERMINED BY SITTING IN CHAIR

TRANSFORMER FOR 5100 LIFT FRAME

GM2000-TR	Chair Motor Transformer 2000	1
GM1400-TR	Chair Transformer 1400	1
GM1410-TR	Chair Transformer 1410	1
GM1501-APUS-36	Transformer Plug 1501-A Standard USA 36 inches	1

TECHNICAL SERVICE FOR FABRIC, FOAM, SPRING AND WOOD PART NUMBERS AND PRICING

LM502 LIFT FRAME

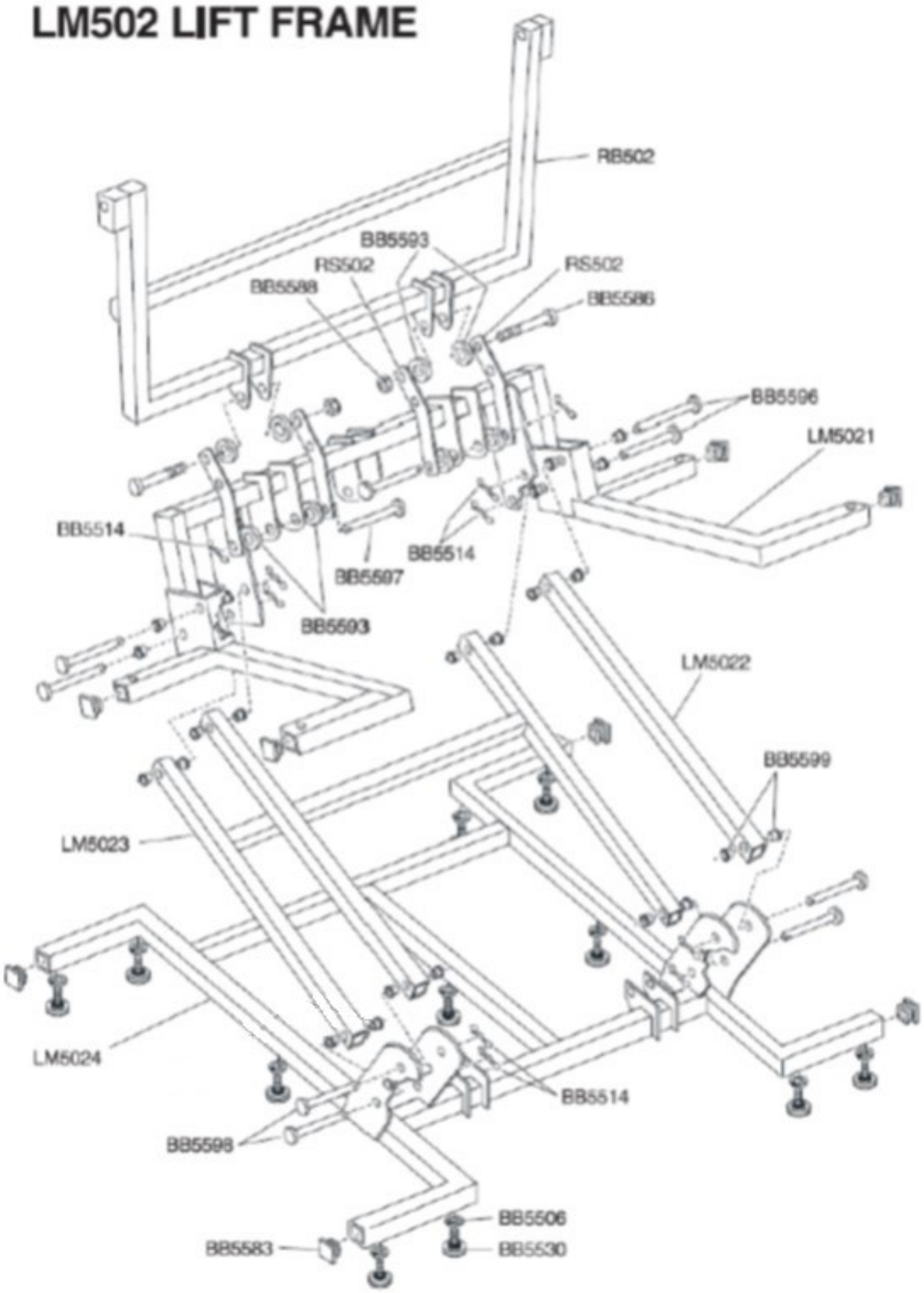

For use in model: PR502

LM502 LIFT MOTOR

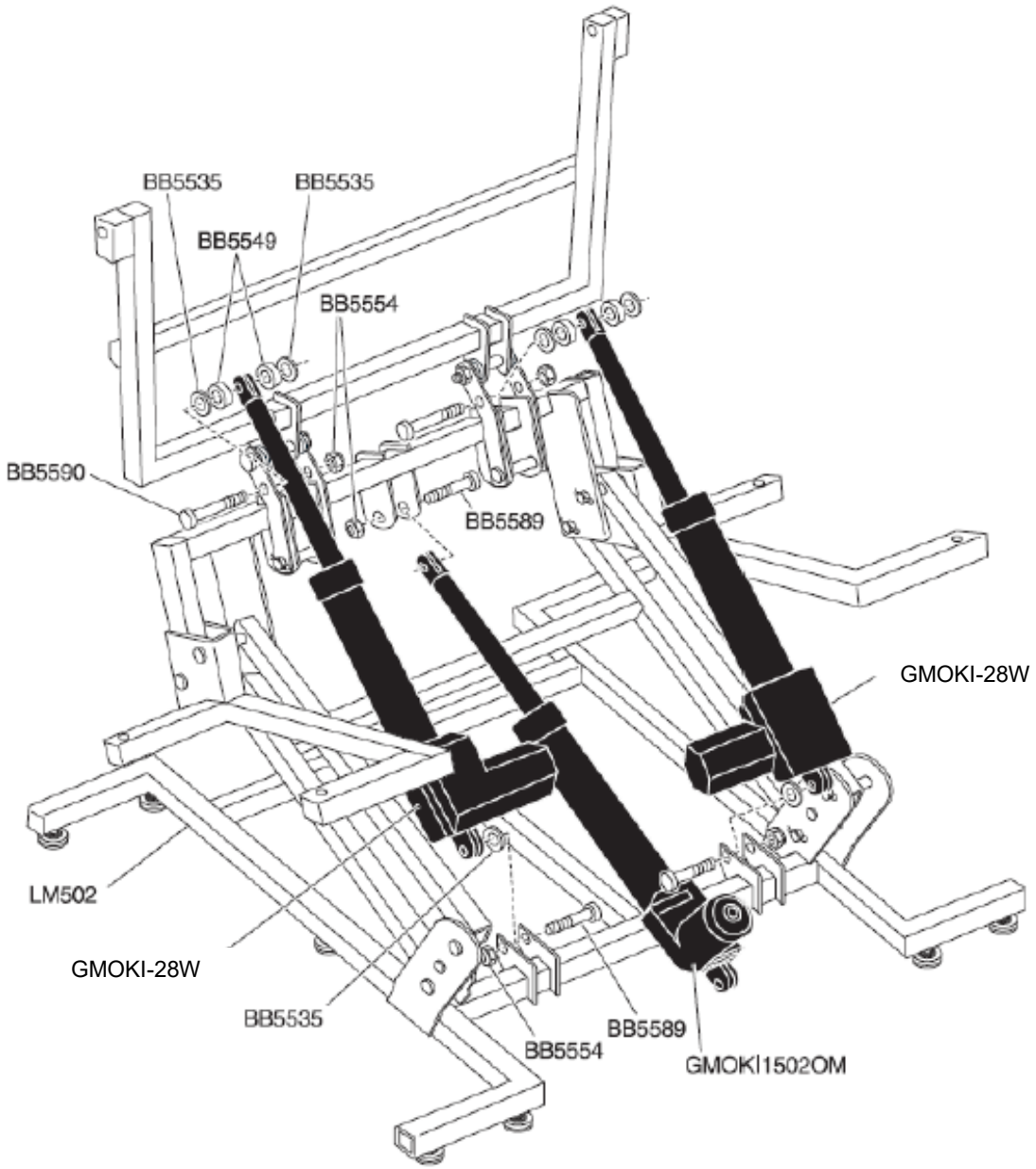

LM502 ELECTRICAL CONNECTION

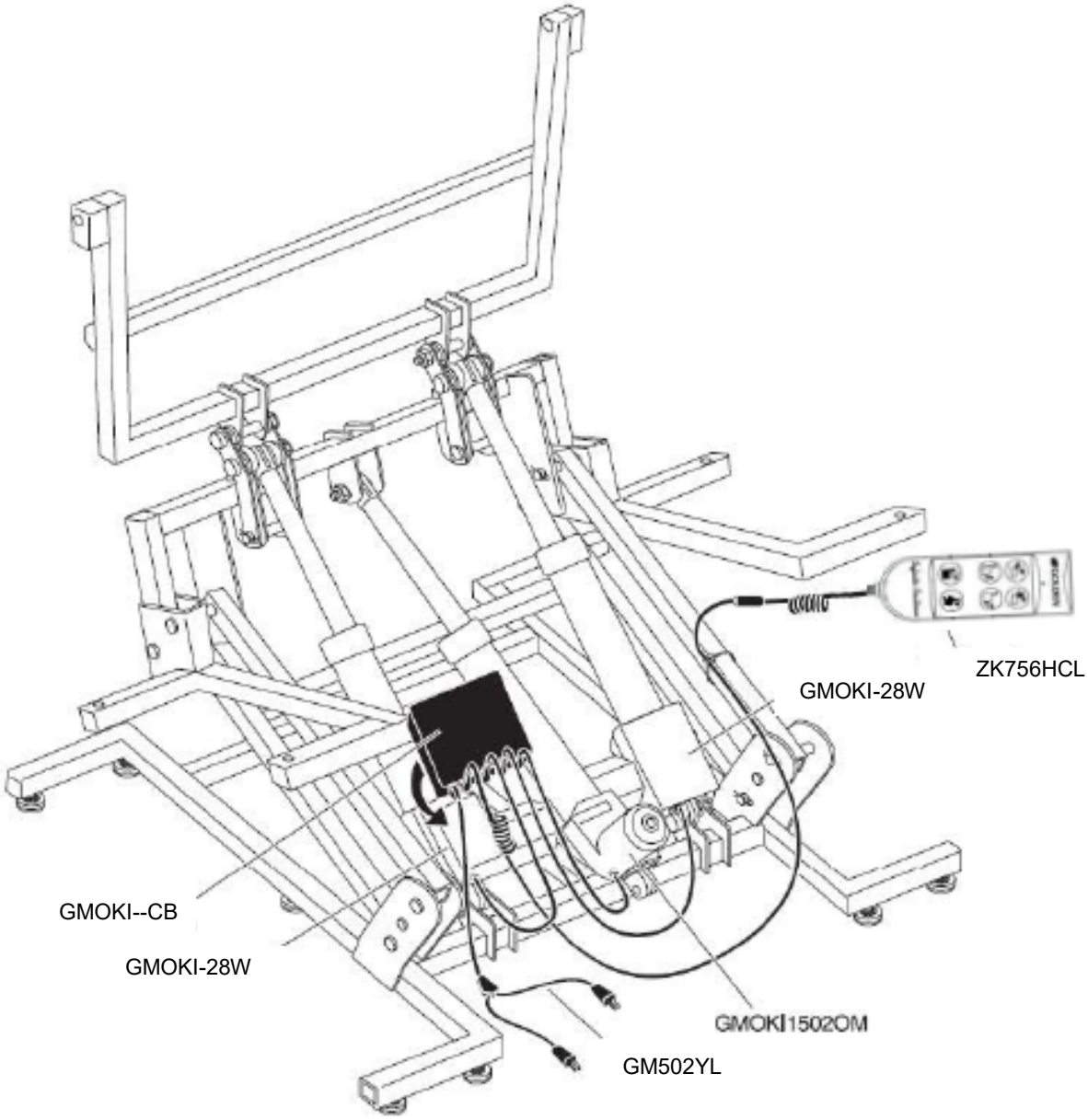

RM502 RECLINE MECHANISM

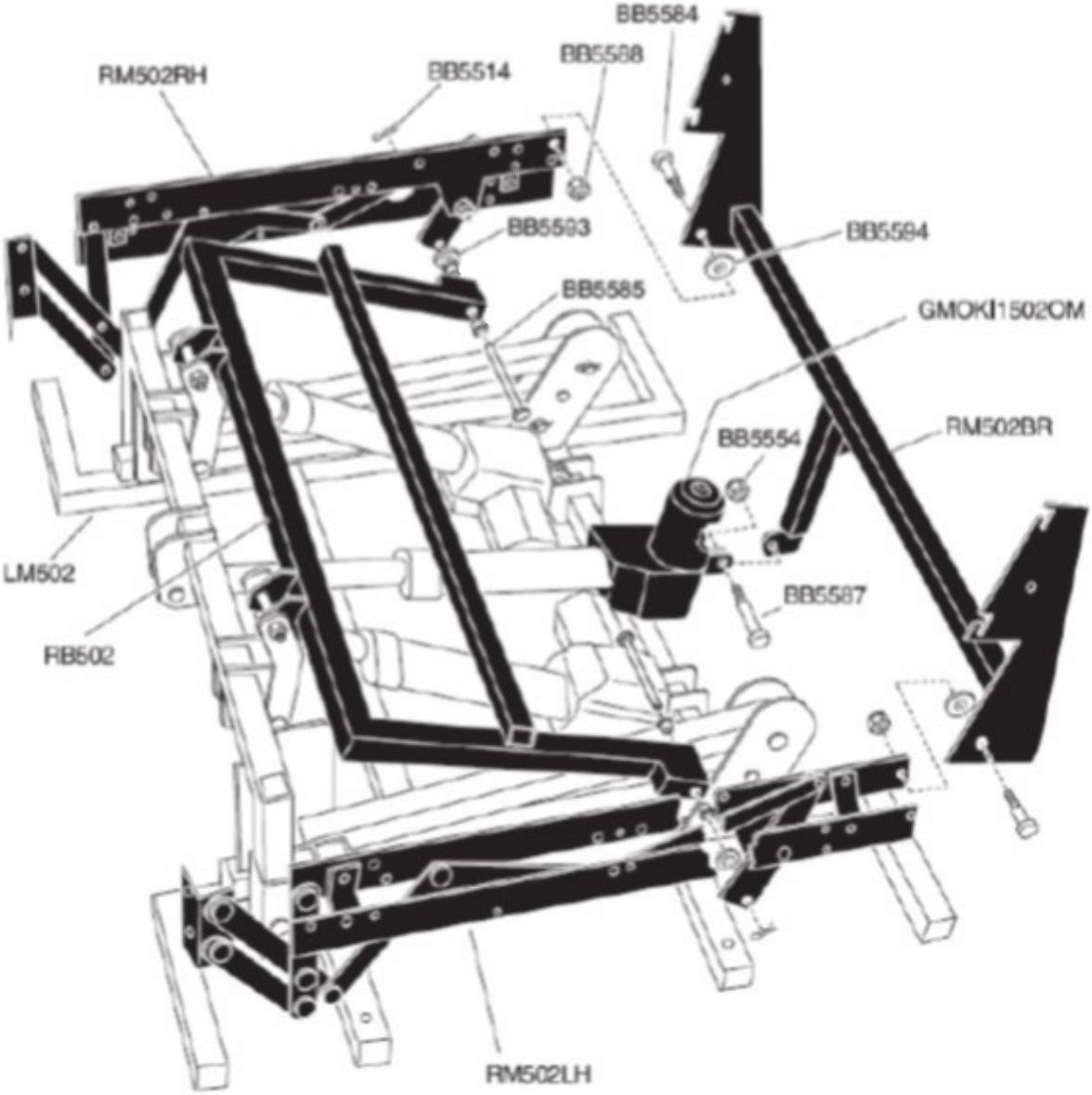

LM502 LIFT FRAME PARTS LIST

Part Number	Description	Qty. Per Unit
BB5506	Washer, Split Lock 1/4 Zinc	17
BB5514	Pin, Bow Shaft 72 1/4 Hitch Pin	12
BB5530	Leg Leveler 5/16 X 7/8	13
BB5535	Washer. 750 x 394 x 125 Nylon	6
BB5548	Bolt, 5\16" - 18 X 3" Hex Head Zinc Tap Grade 5	4
BB5549	Washer, 403 X 750 X 312 Nylon	4
BB5554	Nut, 5/16 - 18 Zinc Nylon Lock	6
BB5583	Cap, 1 1/4 X 1 1/4 End 10-14 GA Black	12
BB5584	Bolt, 1/2 x 1/2 Shoulder	2
BB5585	Pin, 1/2 X 3 1/4 Clevis	2
BB5586	Bolt, 1/2 x 2 1/2 Shoulder	2
BB5587	Bolt, 3/8 x 1 1/4 Shoulder	1
BB5588	Nut, 3/8 x 16 Zinc Nylon Lock	4
BB5589	Bolt, 3/8 x 1 3/4 Shoulder	3
BB5590	Bolt, 3/8 x 2 1/2 Shoulder	2
BB5591	Screw, 5/16 x 1 1/2 Hex Cap Zinc	2
BB5592	Screw, 5/16 z 2 Hex Cap Zinc	4
BB5593	Washer, 750 x .502 x .1875 Nylon	8
BB5594	Washer, 1250 x .502 x .0625 Nylon	2
BB5596	Cap, 1 1/4" Round End Black	4
BB5597	Pin, 1/2 x 2 1/2 Clevis Plain	2
BB5598	Knob. 3/8-16X1/2 Soft Touch Flu for Walker Holder	4
GMOKI-28W	Motor Chair Okin 26-28 Wide Motor	2
GMOKI-CB	Motor Chair Okin 26-28 Wide Control Box 4/2003	1
GMOKI1502OM	Motor Chair Okin Single Motor For 502	1
GM502YL	Y CONNECTOR with LED Light	1
LIFT-502	Lift –502	1
LM502	Lm502 Lift Frame	1
LM-RS502	Recline Motor Strap for Lift Frame Series 502	4
ZK756HCL	Hand Wand for Maxi Comfort LED	1

RECLINE BAR FOR 502 LIFT FRAME

RB502	RECLINE BAR FOR 502 CHAIR	1

RECLINE MECHANISM FOR 502 LIFT FRAME

RM502BR	Recline Back Yoke 502	1
RM502L	RECLINE MECHANISM LEFT SIDE 502	1
RM502R	RECLINE MECHANISM RIGHT SIDE 502	1

LEFT AND RIGHT IS DETERMINED BY SITTING IN CHAIR

TRANSFORMER FOR 502 SERIES LIFT FRAME

GM2000-TR	Chair Motor Transformer 2000	2
GM1501-APUS-36	Transformer Plug 1501-A Standard USA 36 inches	2

CALL TECHNICAL SERVICE FOR FABRIC, FOAM, SPRING AND WOOD PART NUMBERS AND PRICING

LM992 LIFT FRAME ASSEMBLY

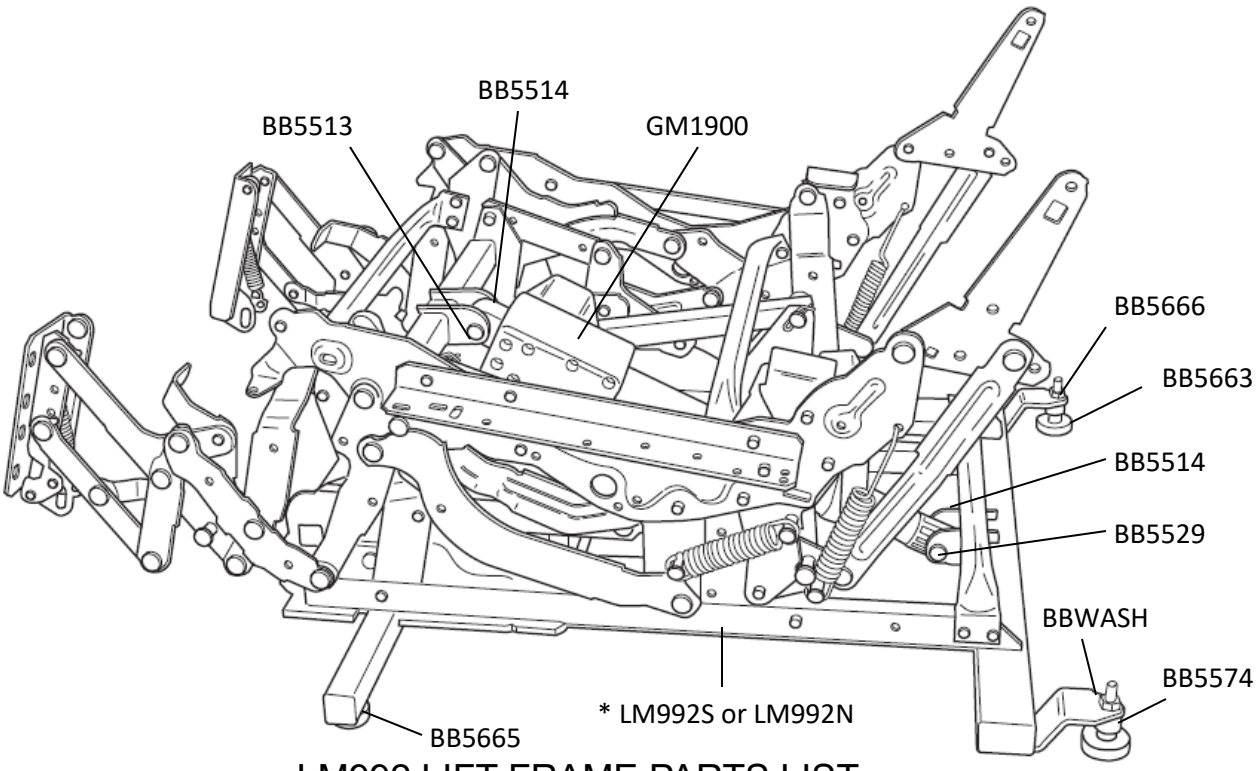

LM992 LIFT FRAME PARTS LIST

Part Number	Description	Qty. Per Unit
BB5513	Pin, 3/8 x 2 Zinc Clevis	1
BB5514	Pin, Bow Shaft 72 1/4 Hitch Pin	2
BB5518	Tywrap, 8" Black	2
BB5518-W11TY	Tywrap, 11” White	1
BB5529	Pin, 3/8 x 1 7/8 Zinc Clevis	1
BB5574	Washer, Nylon Black, 314 x 750 x 313	2
BB5665	Glide Plastic for LM992s Wall Hugger Frame	2
BB5663	Leg Leveler 5/16 x 18 x 1-1/2 Stem for 992	2
BB5666	Nut, Hex Nut 5/16 Zinc	2
BBWASH	Washer Split Lock 5/16 Zinc	2
FMPIPE-1	Foam Pipe Foam Grey 3/4 ID By 1 5/8 OD	1
GM1502L-B	Motor Chair Battery Back Up Wire for GM1501-B with LED	1
GM1900	Motor Wall Hugger 992	1
* LM992N	LM992 Narrow Lift Frame	1
* LM992S	LM992 Small Lift Frame	1
ZK1100-EXT	Extension for Hand Control for ZK1100 2 Button System	1
GM1501-APUS-36	Transformer Plug 1501-A Standard USA 36 inches	1
GM2102-TR-PK	Chair Motor Transformer 2 Amp with US Plug Pack	1
ZK1200-HC-1	Hand Wand, 2 Button LED Gold with Walnut Burl Grain USB	1

For use in models: PR931-SMA, PR931-MED, PR931-LAR

LM5124 LIFT FRAME CRADLE ASSEMBLY

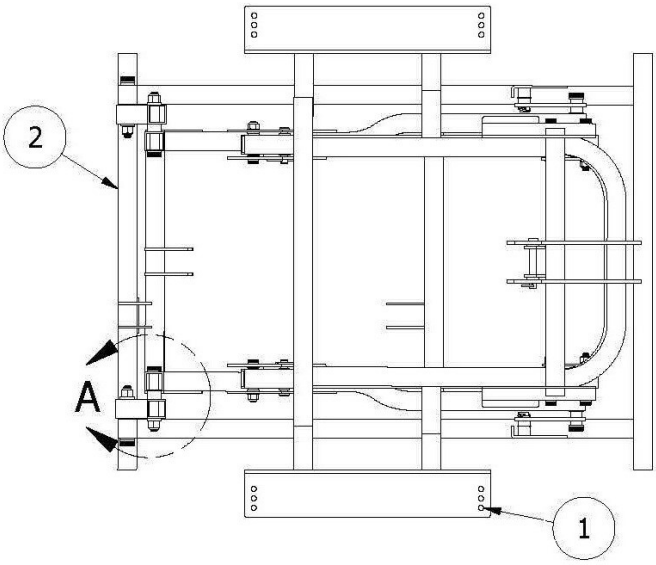

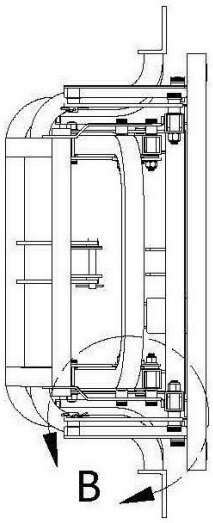

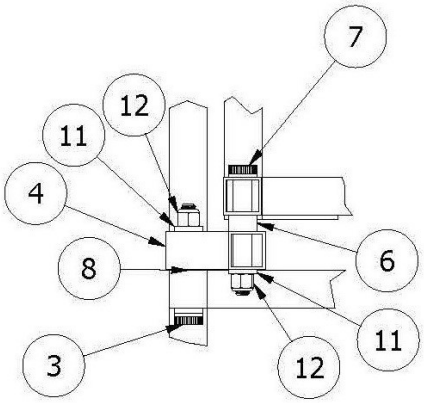

DETAIL A

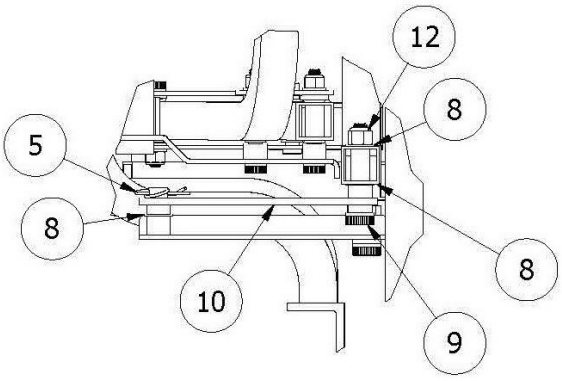

DETAIL B

PARTS LIST		
ITEM	QTY	PART NUMBER
1	1	Lift Frame Assembly
2	1	Cradle Assembly
3	2	2 1/4" Shoulder Bolt
4	2	Rear Link
5	2	Locking Pin
6	2	.42 Washer
7	2	2 1/2" Shoulder Bolt
8	8	.03 Washer
9	2	1 3/4" Shoulder Bolt
10	2	Front Link
11	4	1/8" Washer
12	6	3/8-16 LocK Nut

Use "Super Lube" on all pins

For use in models: PR514-MLA, PR405-MLA, PR761-MLA, PR515-MLA

LM5124 LIFT FRAME CRADLE ASSEMBLY - CONTINUED

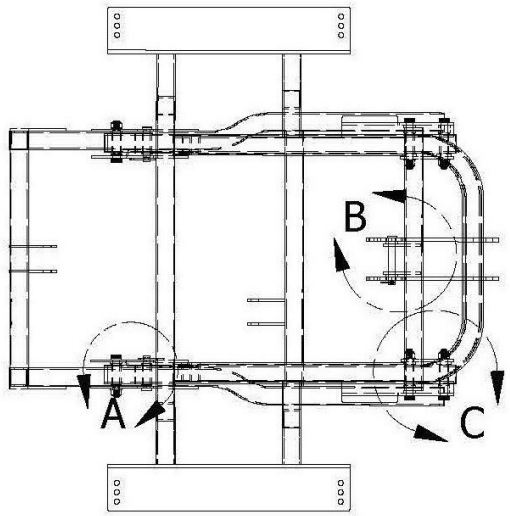

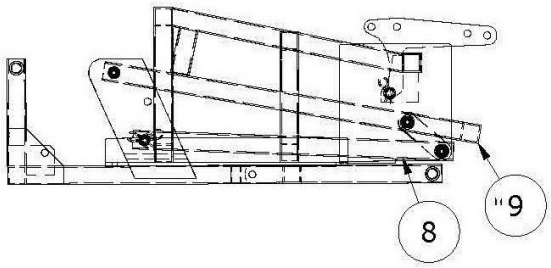

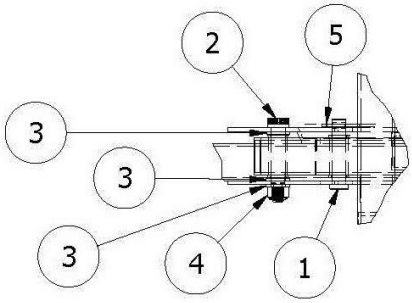

DETAIL A

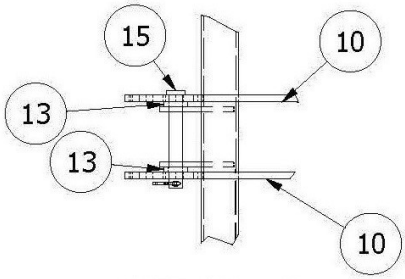

DETAIL B

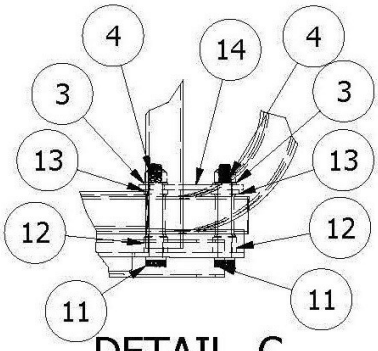

DETAIL C

PARTS LIST		
ITEM	QTY	PART NUMBER
1	2	1.75" Clevis Pin, BB5566
2	2	1 1/2" Shoulder Bolt
3	10	1/16" Washer
4	6	5/16-18 Lock Nut
5	3	Hairpin Clip
6	1	Base Assembly
7	1	Top Assembly
10	2	Strap
11	4	2" Shoulder Bolt
12	4	.40 Washer
13	2	1/8" Washer
14	2	Bridge Strap
15	1	2.50" Clevis Pin, BB5531

Use "Super Lube" on all joints

For use in models: PR514-MLA, PR405-MLA, PR761-MLA, PR515-MLA

LM5124 LIFT FRAME CRADLE ASSEMBLY – REPLACEMENT

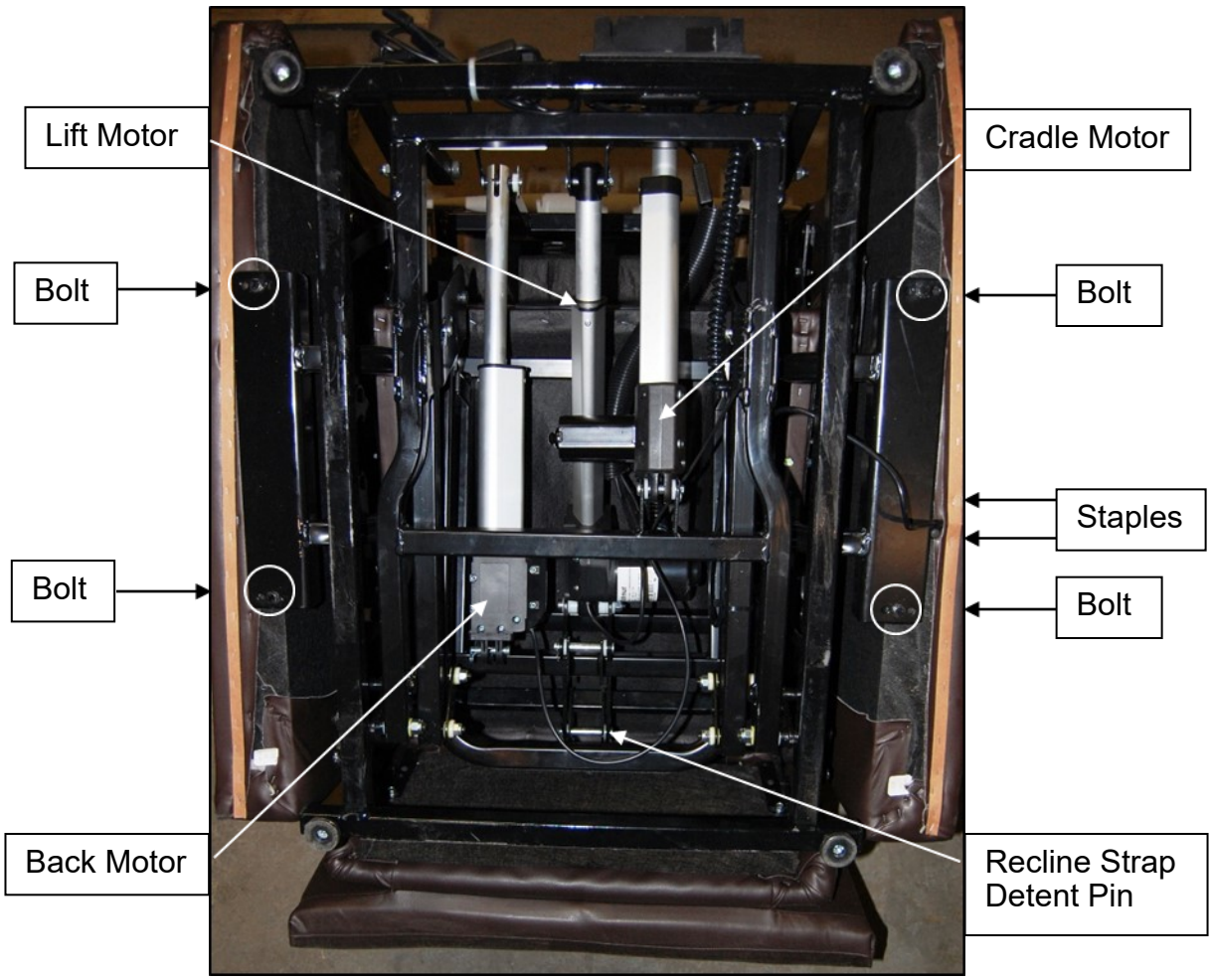

Figure 1

To Replace Frame:

1. Disconnect the hand control from the extension wire inside the pocket on the side of the chair.
2. Remove staples on both sides of the hand control extension wire. See figure 1.
3. Pull the extension out of the fabric opening.
4. Disconnect the back motor wire from the 3-way harness.
5. Remove the back motor.
6. Remove the recline strap detent pin.
7. Remove the 4 bolts (center position) which secure the frame to the chair.
8. Lift the frame out of the chair. (**Warning: The lift frame can open when removing, proceed with caution**).
9. Repeat steps 1- 8 in the reverse order to install the new LM5124 frame.

For use in models: PR514-MLA, PR405-MLA, PR761-MLA, PR515-MLA

Note: PR405-MLA has no back motor.

LM5124 LIFT FRAME - CRADLE MOTOR

Attaching Cradle Motor to Frame

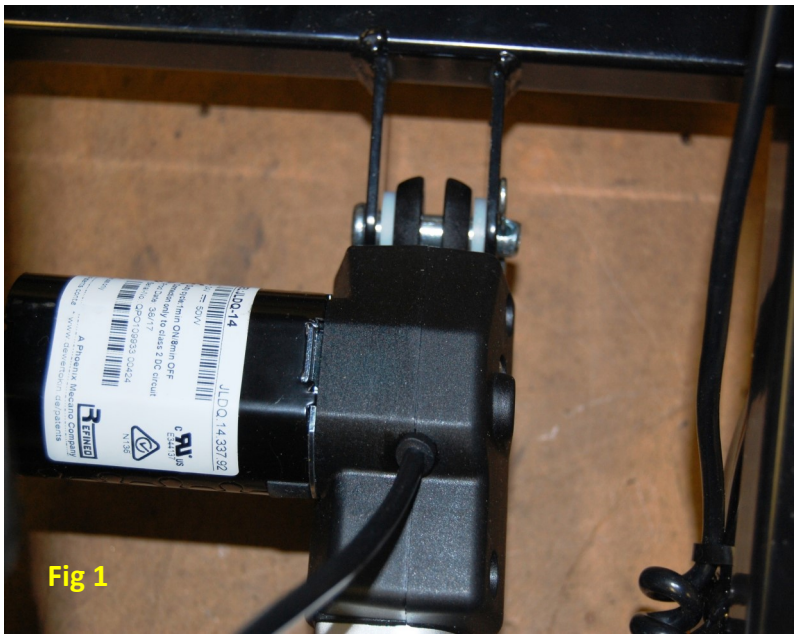

Fig 1

Step 1 - Align the back of cradle lift motor (GM1450-CM) to frame bracket. Insert clevis pin (BB5512) 3/8" x 1 5/8" through frame, two 750 x 394 x 125 nylon washers (BB5535) 394 x 750 x 125, motor and attach with bow shaft 72 1/4 hitch pin (BB5514). Fig 1

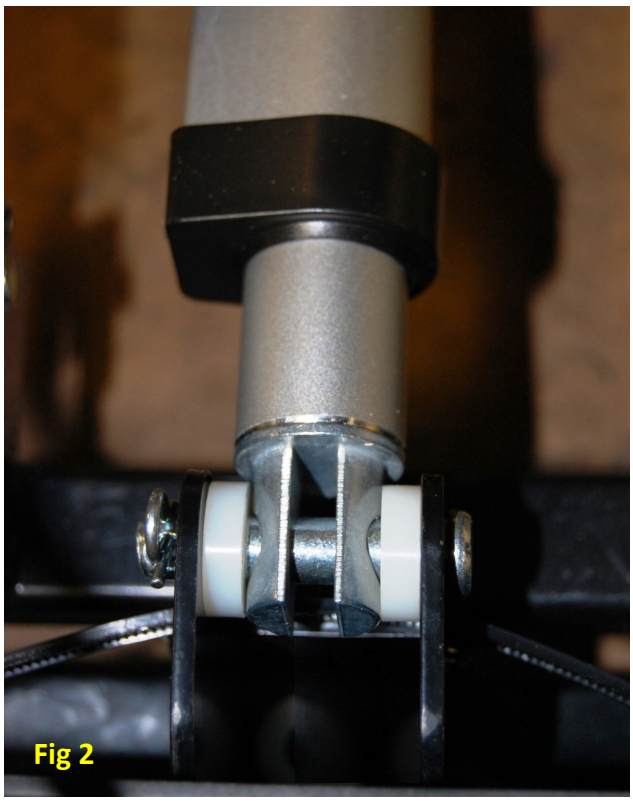

Fig 2

Step 2 - Align the cradle motor fork head to frame bracket. Insert clevis pin (BB5512) 3/8" x 1 5/8" through the frame, two nylon washers (BB5540) 394 x 750 x 125, motor tip and attach the bow shaft 72 1/4 hitch pin (BB5514). Fig 2

For use in models: PR514-MLA, PR405-MLA, PR761-MLA, PR515-MLA

LM5124 LIFT FRAME - LIFT MOTOR

Attaching Lift Motor to Frame

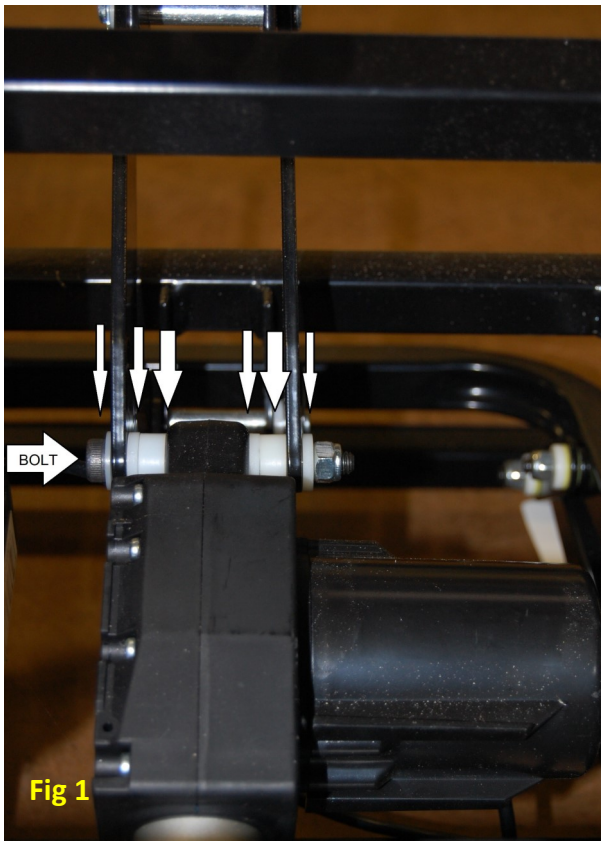

Fig 1

Step 1 - Align the lift motor (GM1450-C3M) with the recline straps. Insert shoulder bolt (BB5590) 3/8 x 2 1/2 through nylon washer (BB5003) 380 x 750 x 062, recline strap, nylon washers (BB5535) 394 x 750 x 125, and (BB5549) 403 x 750 x 312, motor, nylon washers (BB5535) 394 x 750 x 125, and (BB5549) 403 x 750 x 312, recline strap, nylon washer (BB5535) 394 x 750 x 125, and 3/8 x 16 zinc nylon lock nut (BB5588). Fig 1

Attaching Lift Motor Fork Head to Frame

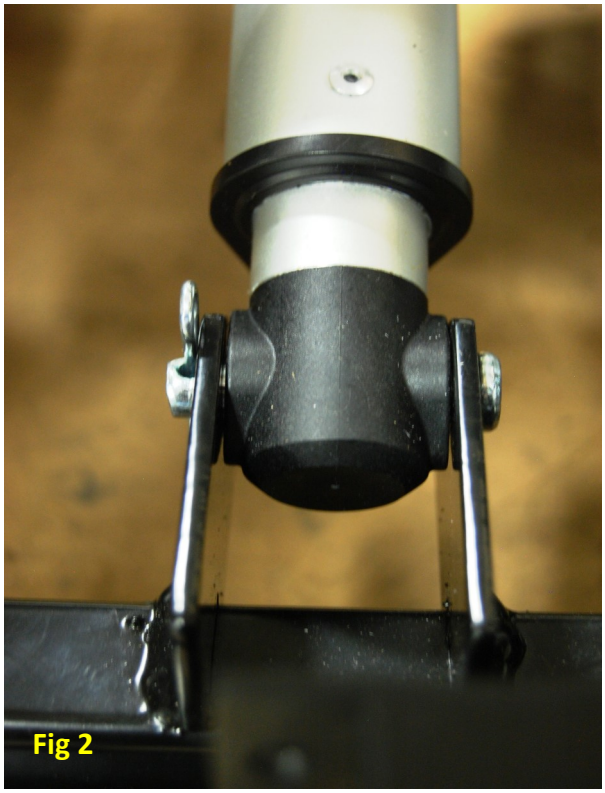
Fig 2

Step 2 - Align the lift motor tip to frame bracket. Insert clevis pin (BB5512) 3/8" x 1 5/8" through the frame, fork head, and attach the bow shaft 72 1/4 hitch pin (BB5514). Fig 2

For use in models: PR514-MLA, PR405-MLA, PR761-MLA, PR515-MLA

LM5124 LIFT FRAME - LIFT MOTOR - CONTINUED

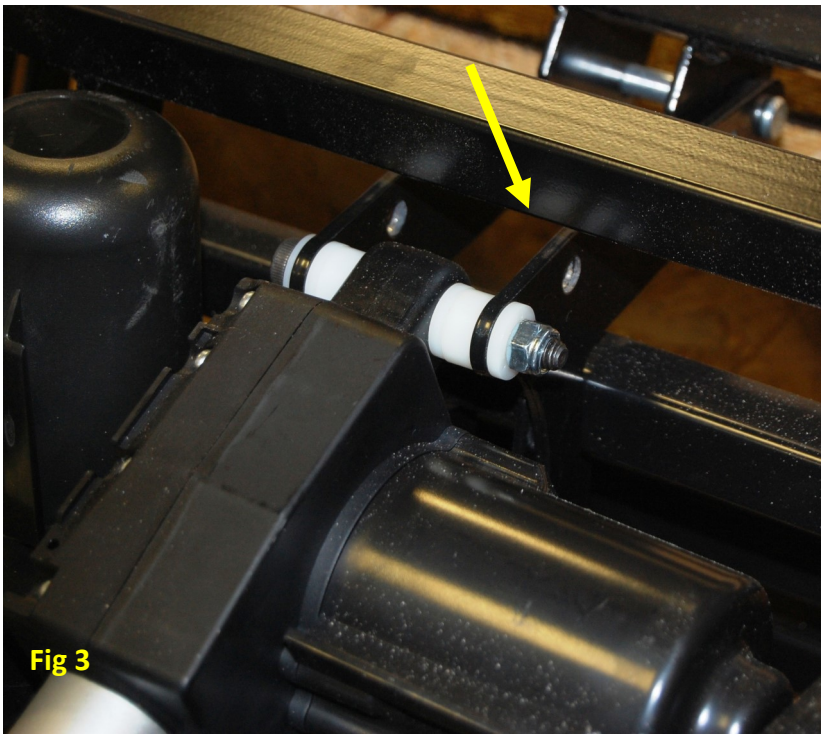

Step 3 - Actuate motor until recline straps meet the cross bar on top piece of frame. Fig 3

LM5124 LIFT FRAME - CONTROL BOX

Attaching the Control Box

Model PR514-MLA Only
Step 1 - Place control box (GMC3M-CB) as shown. Attach extension cord for (ZKAD-EXT) and control box (GMC3M-CB) to the frame using a 24" black Ty wrap (BB5518-24TY) as shown in the picture. Fig 1

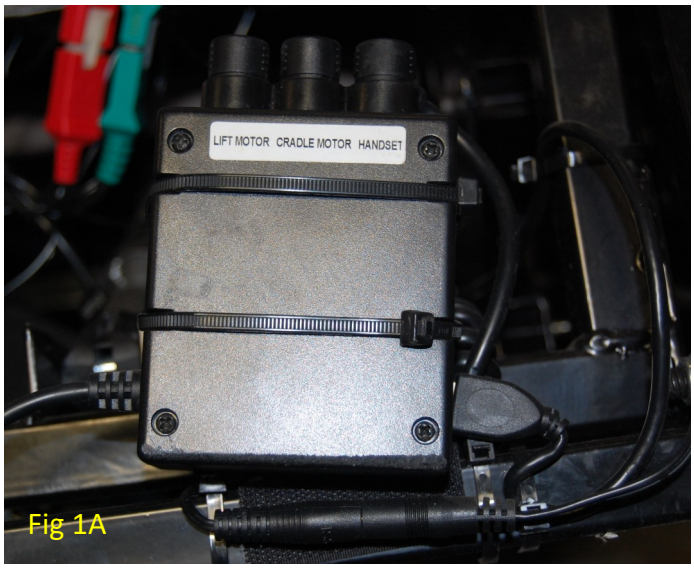

Model PR405-MLA Only
Step 1 - Place control box (GM3000-CB) as shown. Attach to the frame using a 24" black Ty wrap (BB5518-24TY) as shown in the picture. Fig 1A

For use in models: PR514-MLA, PR405-MLA

LM5124 LIFT FRAME - CONTROL BOX - CONTINUED

Fig 2

Step 2 - Route the hand control coiled extension along the right-hand side inside rail. Use 8" black Ty wrap (BB5518) in two (2) places on the lower rail. First, in front of the upright, and second in front of the cradle motor as shown. Next, loop the extension back and use one (1) 8" black Ty wrap (BB5518) to the upper rail as shown. Lay the loose end on the extension over top of the upper rail as shown. Fig 2

Model PR514-MLA Only

Step 3 - Attach the control box cradle transformer extension (GM2100-CB-EXT) and the Control box extension C3M to motor (GMC3M-3MEC) to the control box. Attached the 1" black elastic cable hanger to the U-bar and place the motor cables it the hanger as shown.

NOTE: These cables MUST be suspended inside the elastic hanger, and the ease locks MUST be on the control box side of the hanger as shown. Fig 3.

Step 4- Attach the control box cradle transformer extension (GM2100-CB-EXT) and the box extension C3M to motor (GMC3M-3MEC) to the control box. Attached the 1" black elastic cable hanger to the U-bar and place the motor cables it the hanger as shown.

NOTE: These cables MUST be suspended inside the elastic hanger, and the ease locks MUST be on the control box side of the hanger as shown. Fig 3.

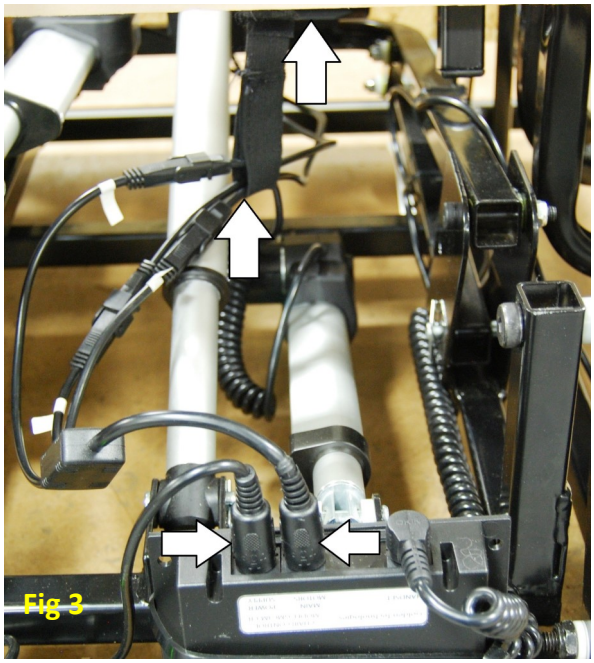
Fig 3

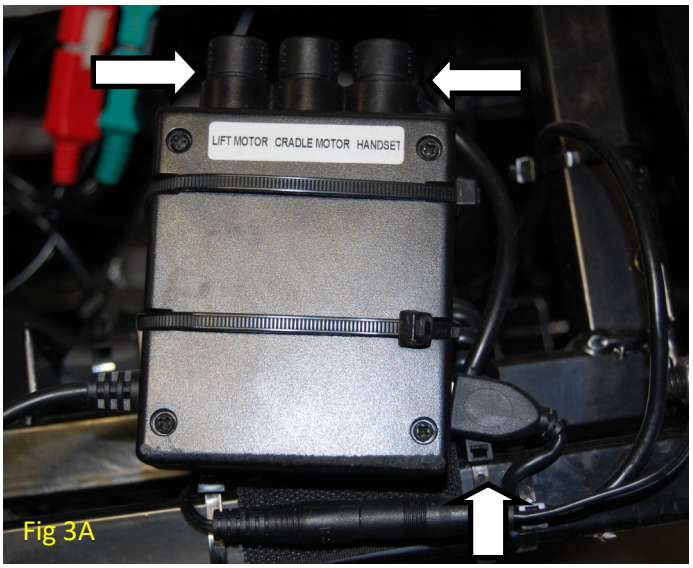

Fig 3A

Model PR405-MLA Only

Step 3 - Attach the USB cable (GMUSB-2-MF) to the frame with a 8” black Ty wrap (BB5518) as shown. See Fig 3A. Run the USB cable along the frame and secure it using Ty wraps like the coil cord shown above in Fig 2.

Step 4 - Attach the control box extension (GM3000-CB-EXT) to the control box. Attach the cradle motor (GM3000-CM) and the lift motor (GM3000-LM) to the control box. as shown. Fig 3A.

For use in models: PR514-MLA, PR405-MLA

LIFT FRAME - CONTROL BOX - CONTINUED

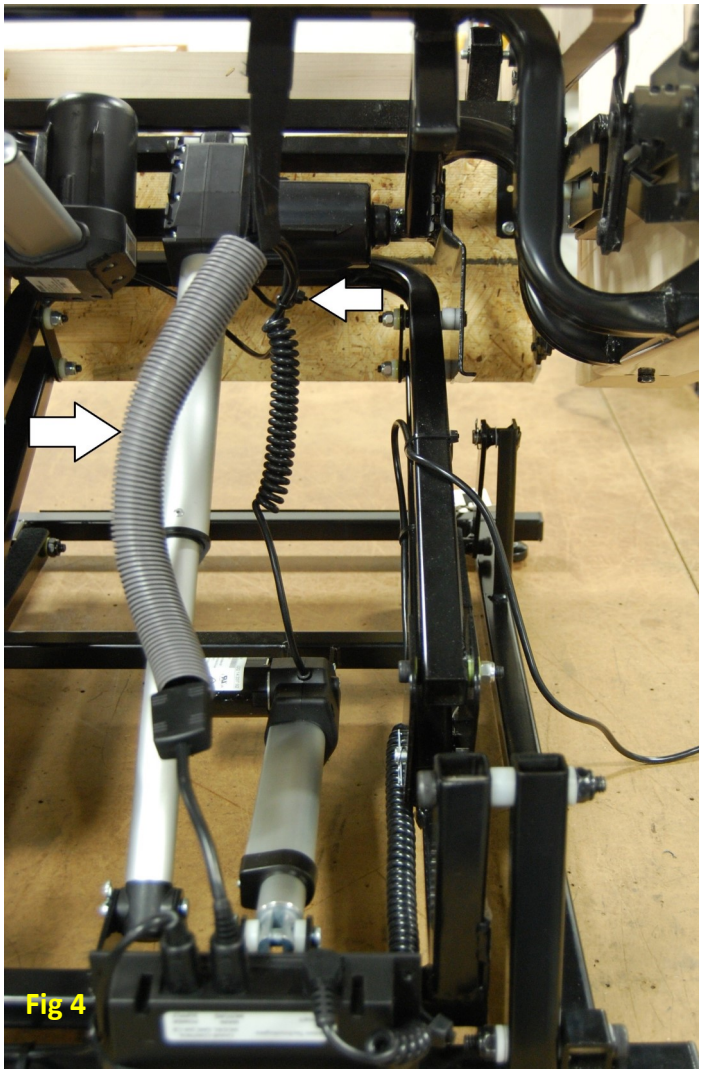

Model PR514-MLA Only

Step 4 - Place a 12" piece of spiral wrap around the motor cables between the elastic hanger and the 3-way splitter as shown. Use one (1) 8" black Ty wrap (BB5518) to secure the cradle coil wire to the other motor wires as shown. Fig 4

HOW TO REPLACE 502 SCISSOR MECHANISMS

STEP 1: REMOVE THE BACK ASSEMBLY (B-ASSY) FOLLOWING THE ASSEMBLY INSTRUCTIONS OF JOINING BACK TO CHAIR.

STEP 2: ROLL THE BASE ONTO THE TOP OF THE ARMS.

STEP 3: UNPLUG THE POWER SUPPLY CABLE (GM502Y) FROM THE CONTROL BOX (GMOKI-CB).

STEP 4: UNPLUG THE HAND CONTROL (ZK756HCL) FROM THE SIDE OF THE POCKET, USING THE QUICK DISCONNECT.

STEP 5: NOW REMOVE ENOUGH STAPLES THAT WILL ALLOW YOU TO REMOVE THE EXTENSION CORD (ZKAD-EXT) FROM THE POCKET.

STEP 6: CUT ALL WIRE TIES THAT KEEP THE EXTENSION CORD (ZKAD-EXT) CONNECTED TO THE FRAME AND UNPLUG THE EXTENSION CORD (ZKAD-EXT) FROM THE CONTROL BOX (GMOKI-CB).

STEP 7: REMOVE THE OKIN SINGLE MOTOR (GMOKI1502OM) FROM THE LIFT FRAME (LM502) AND THE RECLINE BACK YOKE (RM502BR). TO DO SO REMOVE (1) 3/8 X 1 1/4 SHOULDER BOLT, (BB5587), (1) 3/8 X 2 1/2 SHOULDER BOLT (BB5590), (1) 5/16-18 ZINC NYLON LOCK NUT (BB5554), AND (2) 1250 x .502 x .0625 NYLON WASHERS (BB5594) THAT CONNECTS THE FRONT FORK TO THE LIFT FRAME. ONCE THOSE PINS ARE REMOVED THE OKIN SINGLE MOTOR (GMOKI1502OM) SHOULD SLIDE OUT.

STEP 8: REMOVE THE (2) 1/2 X 3 1/4 CLEVIS PINS (BB5585) ON THE LEFT AND RIGHT SIDES THAT FOLD HOLD THE RECLINE BAR (RB502) TO THE SCISSOR MECHANISMS (RM502L AND RM502R). TO REMOVE THE CLEVIS PINS REMOVE THE BOW SHAFT 72 1/4 HITCH5PIN (BB5514) AND 750 X .502 X .1875 NYLON WASHER (BB5593).

STEP 9: REMOVE (4) 5/16” - 18 X 3 HEX HEAD ZINC TAP GRADE 5 BOLTS (BB5548) THAT HOLD THE LIFT FRAME (LM502) TO THE ARM ASSEMBLY (A-ASSY.) NEXT REMOVE THE LIFT FRAME (LM502), LIFT MOTORS (GMOKI-28W), AND RECLINE BAR (RB502) OFF TO THE SIDE.

STEP 10: REMOVE (4) 1/4” X 1” WHIZ BOLTS THAT HOLD THE SCISSOR MECHANISM (RM502L AND RM502R) TO THE FOOT BOARD.

STEP 11: REMOVE (3) 1/4” X 20 X 2 1/2” BOLTS ON EACH SIDE THAT HOLD THE MECHANISMS (RM502L AND RM502R) TO THE ARM ASSEMBLY (A-ASSY.). AFTER DOING SO REMOVE THE ARMS AND PROCEED TO THE NEXT STEP 12.

STEP 12: REMOVE (1) 1/2 X 1/2 SHOULDER BOLT (BB5584), (1) 3/8” X 1/2” NYLON LOCK NUT, AND (1) NYLON WASHER, ON EACH SIDE CONNECTING THE RECLINE BACK YOKE (RM502BR) TO THE SCISSOR MECHANISMS (RM502L AND RM502R).

STEP 13: REMOVE (3) 1/4” X 20 X 1” WHIZ BOLTS (MS25WL) AND (1) 1/2 X 1/2 SHOULDER BOLT (BB5584) FROM EACH SIDE HOLDING THE SCISSOR MECHANISMS (RM502L AND RM502R) TO THE WOODEN SEAT FRAME.

STEP 14: REVERSE THE ABOVE LISTED PROCEDURE TO INSTALL THE NEW SCISSOR MECHANISMS.

MAXICOMFORT RECLINE MECHANISM

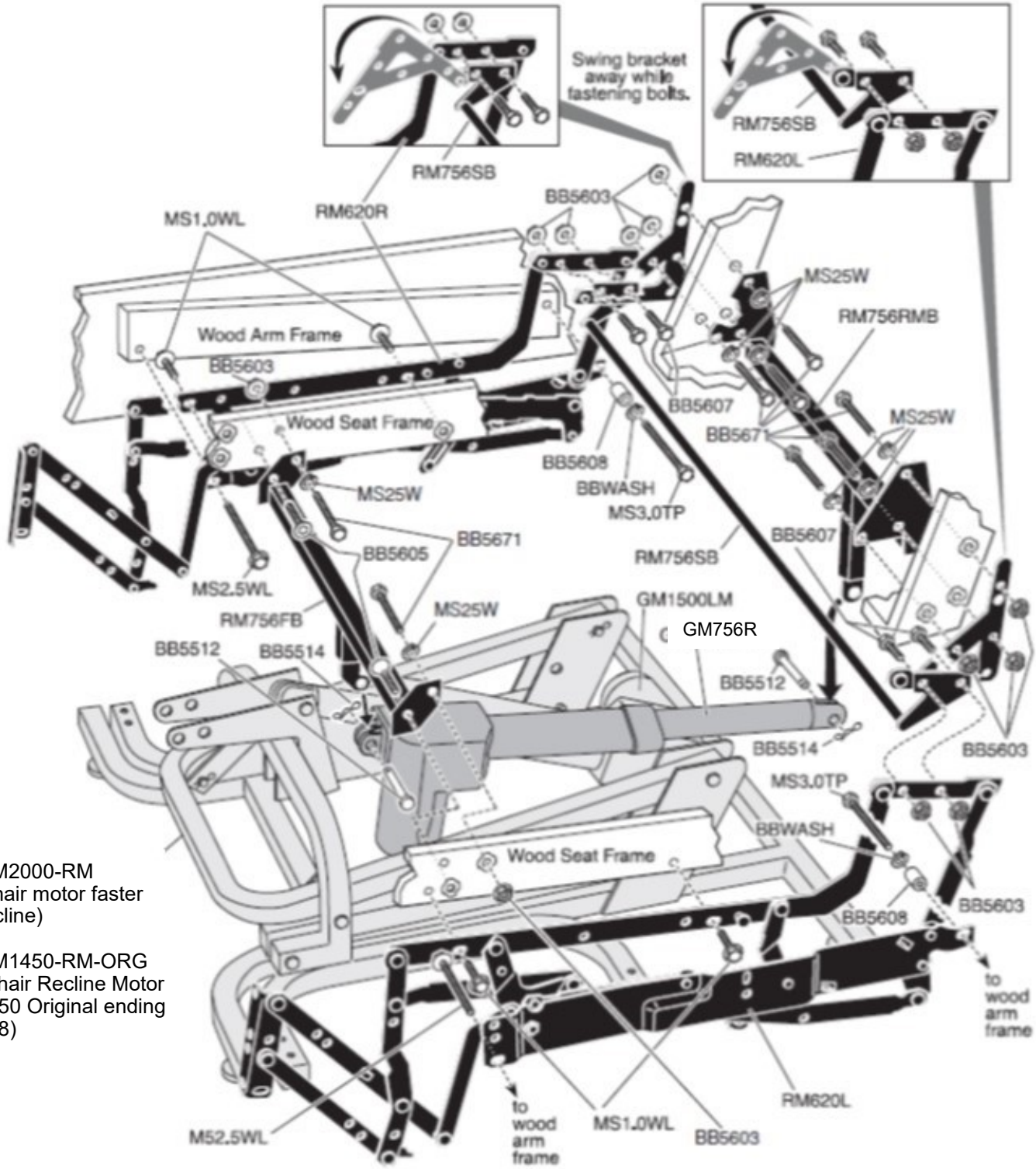

GM2000-RM
(chair motor faster recline)
or
GM1450-RM-ORG
(Chair Recline Motor 1450 Original ending 008)

For use in models: PR630, PR712, PR510-SME, PR510-MLA, PR756MC, PR756L, PR508M, PR505JP, PR505S, PR505M, PR505L, PR512-MLA, PR535-PSA, PR535-M, PR535-L, PR535-T, PR713, PR632

NOTICE When ordering back bolts BB5671 must be Grade 8. Each bolt requires a MS25W split washer and BB5603 lock nut. Each side of the RM756RMB recline bar require a quantity of three of each.

Power Connections

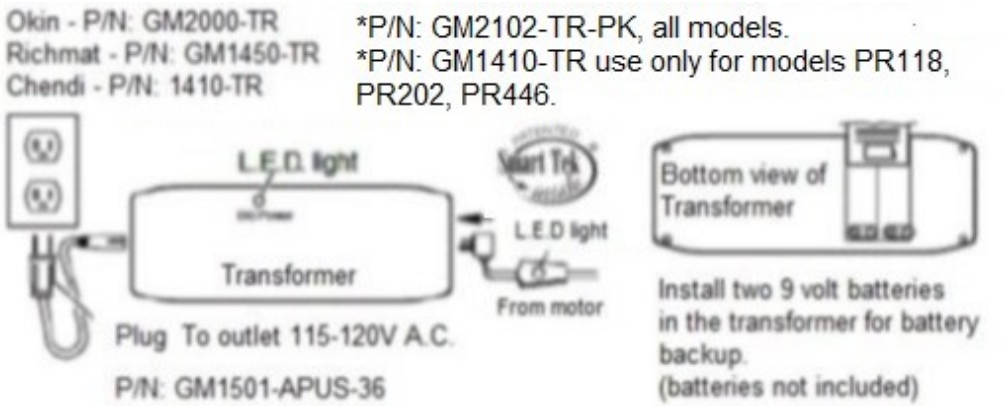

*** Current p/n.**

Models: PR118-MED, PR202-MED, PR200, PR355M, PR355L, PR359M, PR359L, PR401, PR401L, PR401-SME, PR401-MLA, PR404, PR405-MLA, PR410, PR451, PR446-MED, PR446-LAR, PR501JP, PR501S, PR501S-23, PR501M, PR501L, PR501T, PR501-S23, PR501-M26, PR501-LR6, PR501-T28, PR502-W33, PR531-PSA, PR531-MED, PR531-LAR, PR531-TAL, PR643, PR747, PR751TY, PR752, PR906, PR756MC, PR756L, PR505JP, PR505S, PR505M, PR505L, PR506, PR510-SME, PR510-MLA, PR512-MLA, PR502, PR-505TAL, PR-505M26, PR514-MLA, PR405-MLA, PR515-MLA, PR535-PSA, PR535-M, PR535-L, PR535-T, PR535-M26, PR713, PR761-MLA, PR931-SMA, PR931-MED, PR931-LAR

P/N: GM1502L-B

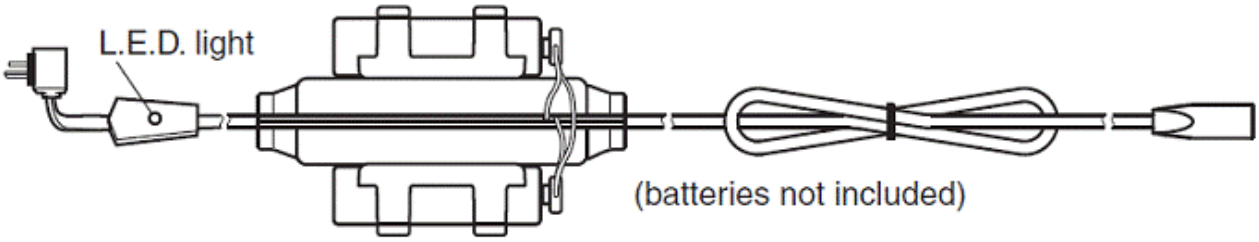

Models: PR501M-26D, PR501L-26D, PR501T-28D, PR931-SMA, PR931-MED, PR931-LAR

NOTICE **Batteries must be a brand name. Batteries will provide a one time use from recline to the seated position, and then the batteries must be replaced.**

Assembly Instructions for Joining Back to Chair

1

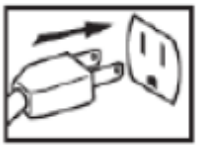

2

Step1: Plug in chair.

Step 2: Press the down arrow on the hand control until the footrest is about parallel to the floor. This will expose the back brackets at the rear of the chair.

Step 3: Slide the back down between the brackets until the threaded studs on the back slip thru the holes in the brackets as shown.

Step 4: Thread the flange lock nuts, located in the arm cover bag, onto the studs and tighten securely using the supplied wrench or a 7/16” box wrench.

Step 5: Return the chair to the seated upright position by pressing the up arrow on the hand control.

Step 6: Attach the bottom of the outside back to the Velcro on the arm cross rail.

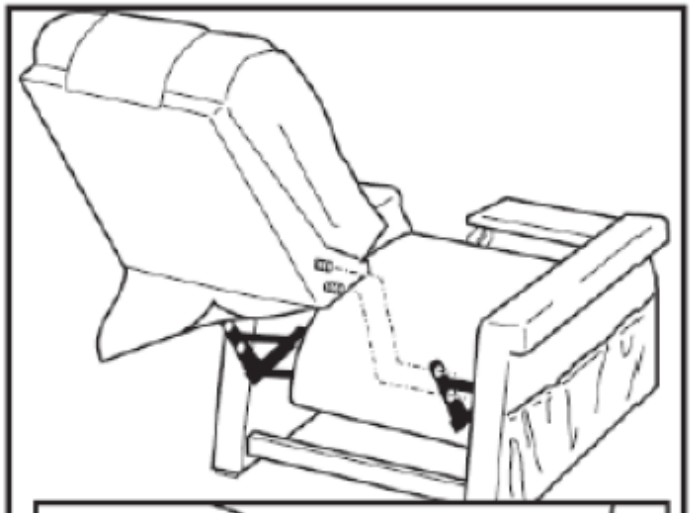

3

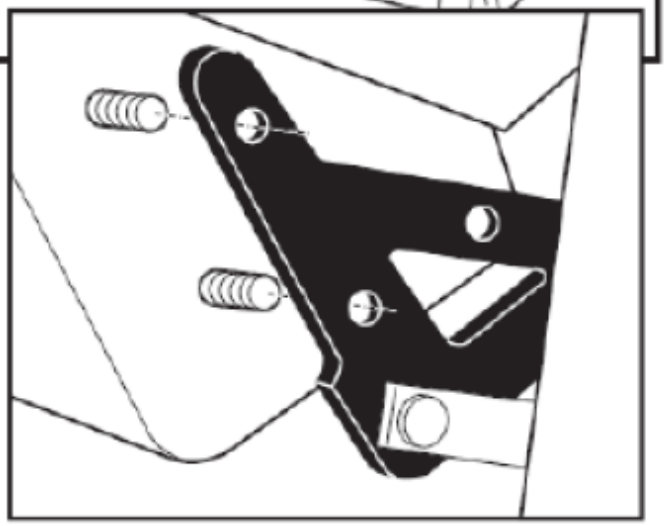

4

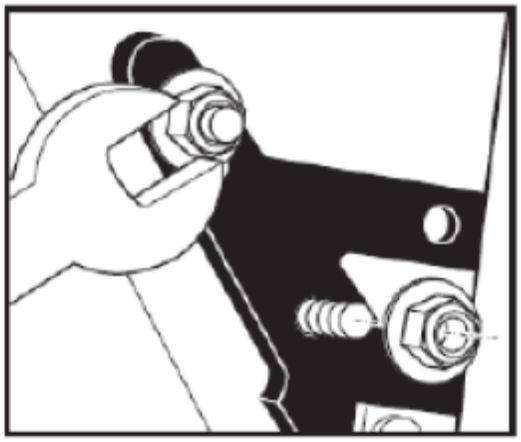

5

Assembly Instructions for Joining Back to Chair

Maxi Comfort Models

1

2

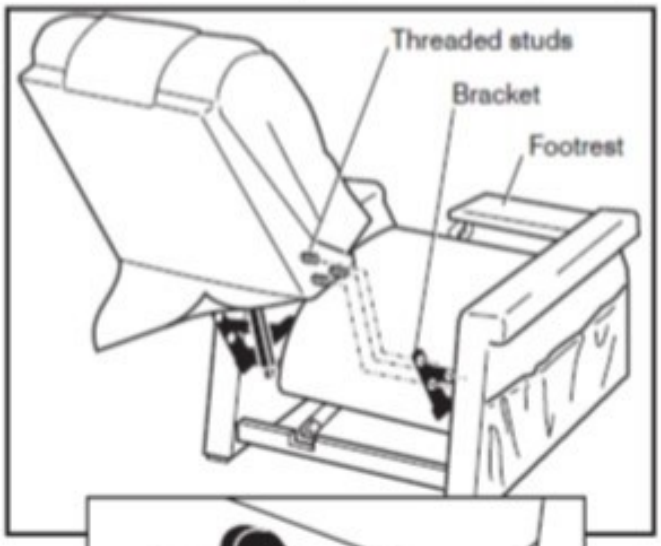

3

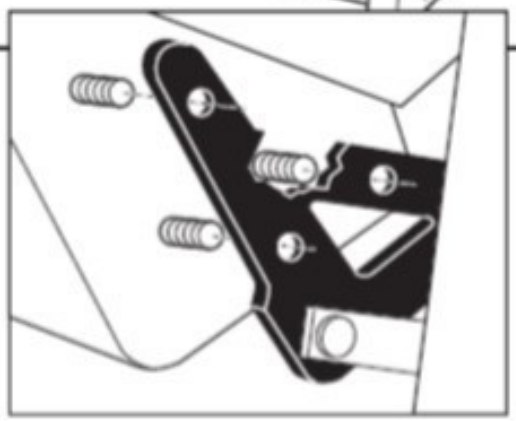

4

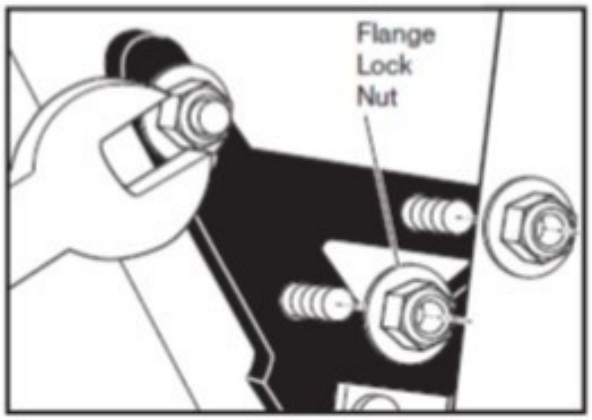

Step1: Plug in chair.

Step 2: Press the recline button on the hand control until the footrest is about parallel to the floor. This will expose the back brackets at the rear of the chair.

Step 3: Slide the back down between the brackets until the threaded studs on the back slip thru the holes in the brackets as shown.

Step 4: Thread the flange lock nuts, located in the arm cover bag, onto the studs and tighten securely using the supplied wrench or a 7/16” box wrench.

Step 5: Remove the clevis pin from the back recline motor tip. Slide the motor tip onto the back recline bar. Insert clevis pin through the hole in the tip and bar. Insert hair pin into the hole at the end of the clevis pin as shown.

Step 6: Return the chair to the seated upright position by pressing the sit button on the hand control.

Step 7: Attach the bottom of the outside back to the Velcro on the arm cross rail.

5

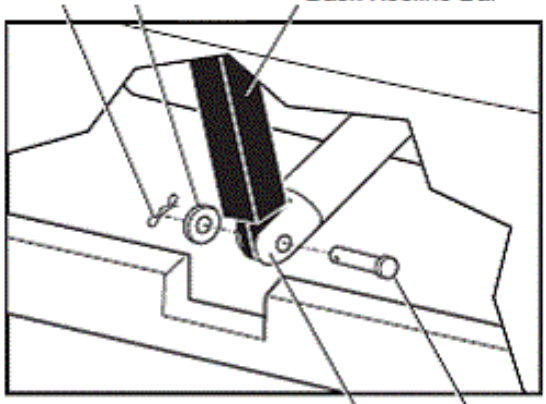

6

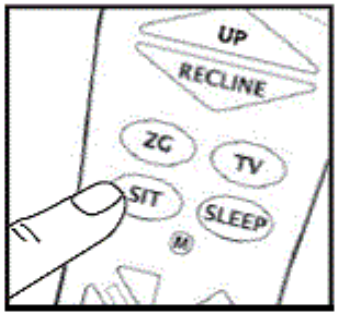

Back Recline Motor Tip

Clevis Pin

Assembly Instructions for Joining Back to Chair

Maxi Comfort Model PR505-M26

1

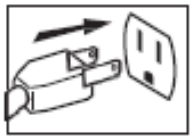

2

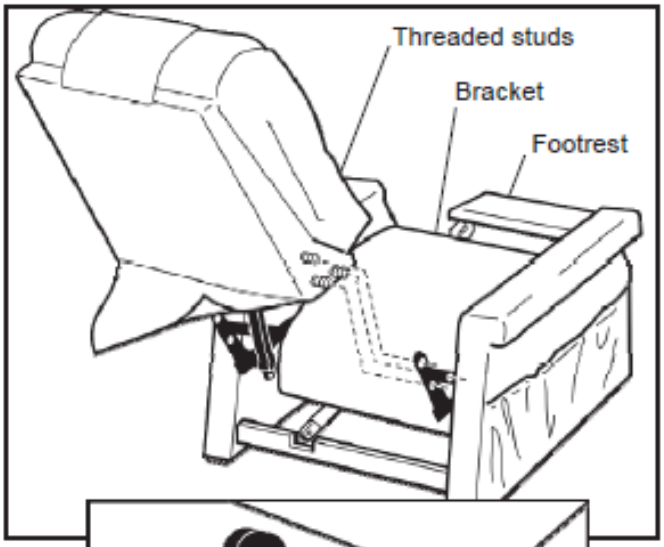

3

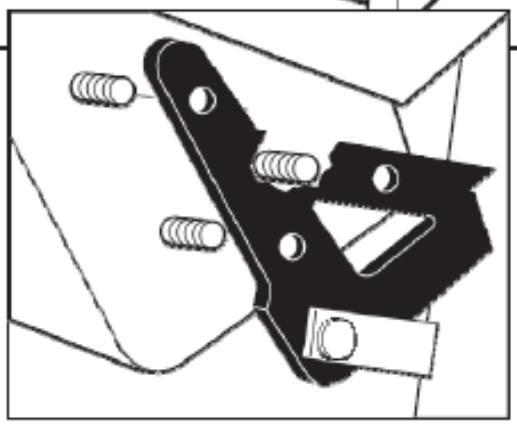

4

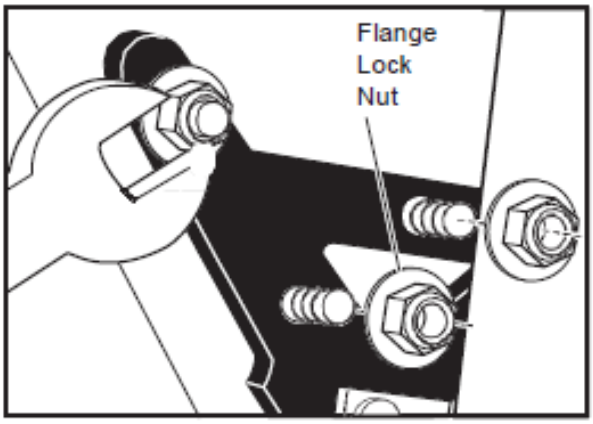

Step1: Plug in chair.

Step 2: Press the red down button on the hand control until the footrest is about parallel to the floor. This will expose the back brackets at the rear of the chair.

Step 3: Slide the back down between the brackets until the threaded studs on the back slip thru the holes in the brackets as shown.

Step 4: Thread the flange lock nuts, located in the arm cover bag, onto the studs and tighten securely using the supplied wrench or a 7/16” box wrench.

Step 5: Remove the clevis pin from the back recline motor tip. Slide the motor tip onto the back recline bar. Insert clevis pin through the hole in the tip and bar. Insert hair pin into the hole at the end of the clevis pin as shown.

Step 6: Return the chair to the seated upright position by pressing the blue up button on the hand
control.

Step 7: Attach the bottom of the outside back to the Velcro on the arm cross rail.

5

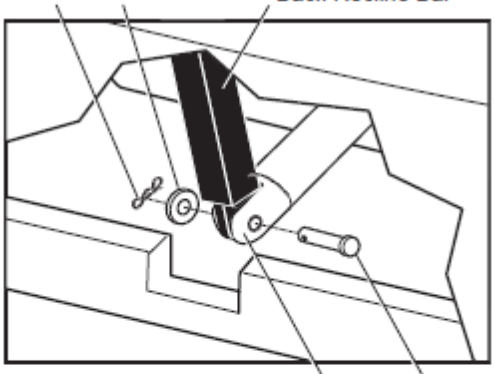

6

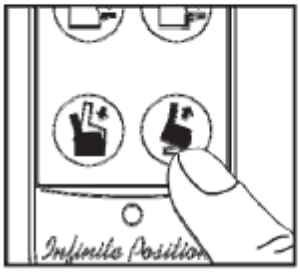

Hand Controls (Lift & Recline)

***P/N**: ZK1200-HC-HC-1

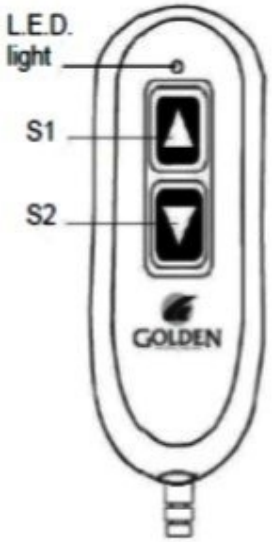

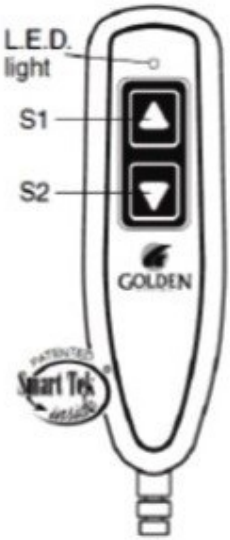

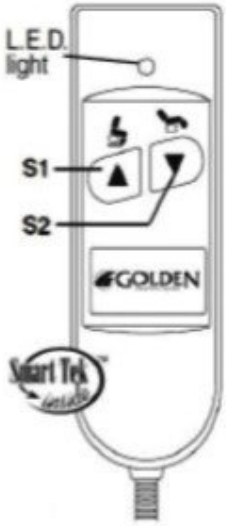

Models: PR401, PR401L, PR747, PR643, PR410, PR751TY, PR752, PR451, PR906, PR501JP, PR501S, PR501M, PR501L, PR501T, PR501S-23, PR501M-26D, PR501L-26D, PR501T-28D, PR502, PR200, PR355M, PR355L, PR359M, PR359L, PR931-SMA, PR931-MED, PR931-LAR, PR118-MED, PR202-MED

***P/N**: ZK404-HC

Model: PR404

***P/N**: ZK756HCL

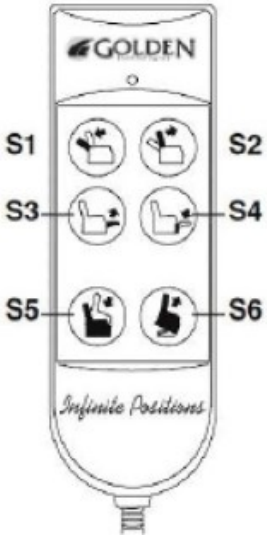

Models: PR502-W33, PR-505M26, PR535-M26, PR531-M26,

***P/N**: ZKAD-5

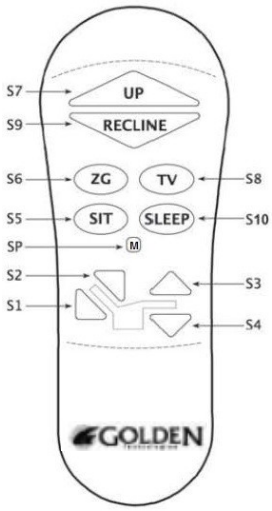

Models: PR712, PR713, PR510-SME, PR510-MLA, PR756MC, PR756L, PR766-MED, PR508M, PR505JP, PR505S, PR505M, PR505L, PR-505TAL, PR508-MED, PR535-PSA, PR535-M, PR535-L, PR535-T, PR713

P/N: ZKAD-1

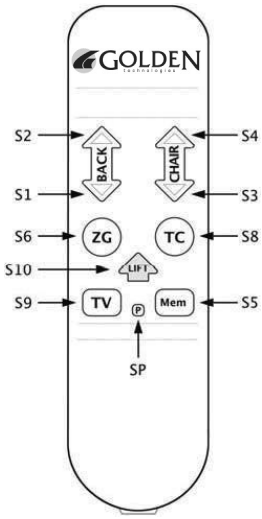

Models: PR756MC, PR756L, PR505JP, PR505S, PR505M, PR505L, PR506, PR510MED

***P/N**: ZKAD-HR-1

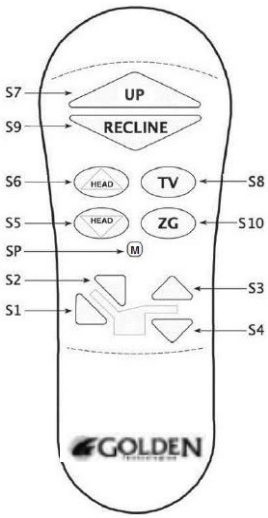

Models: PR630, PR632, PR512-MLA

***P/N**: ZKAD-CM3

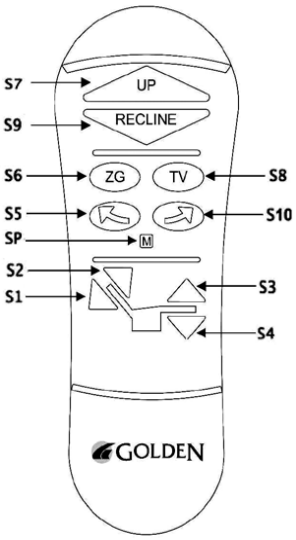

Model: PR514-MLA

***P/N**: ZK3000-C2P

Model: PR405-MLA

Hand Control models currently being used.

Note: For individual switch functions on each hand control, refer to the owner's manuals.

Hand Controls (Lift & Recline)

P/N: ZK3100-C5M

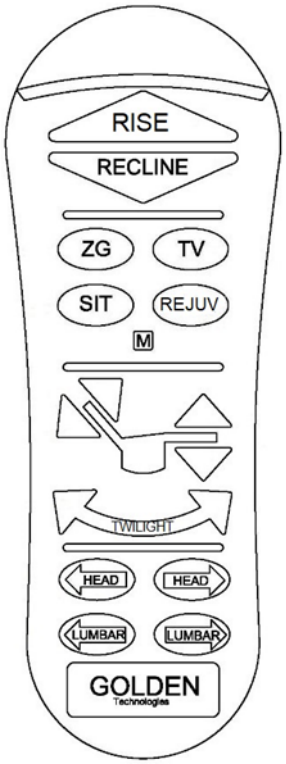

Models: PR515-MLA, PR761-MLA, PR446-MED, PR446-LAR

Note: For individual switch functions on each hand control, refer to the owner's manuals.

Hand Control - Heat & Massage Only

***P/N**: HV3100-HC (Hand Control for HV3100 Series) DHV System with 2 zones
P/N: HV3001 (Heat Massage Deluxe Hand Control Relaxor) DHV System with 3 zones

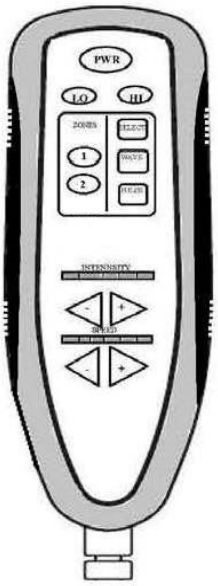

Press PWR to turn On or Off.
15 Minute Timer: Single Press (GREEN)
30 Minute Timer: Press & Hold (ORANGE)

Press LO or HI to turn HEAT ON or OFF.
Independent 30 Minute Timer.

Press any or all ZONE keys to turn any ZONE On or Off.

Press SELECT, WAVE, or PULSE for desired operating mode.

Press – (Left) to decrease or + (Right) to increase INTENSITY and SPEED.

***Models**: All except Capri.

Hand Controls - Lift & Recline and Heat & Massage

P/N: HV4200 (BHV System)

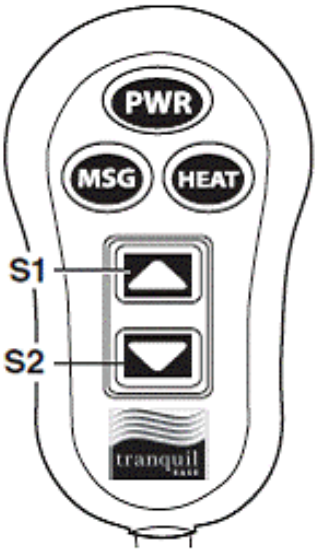

Models: PL340, PR480, PR522, PR524

Input Power: +27Vdc Switching Power Supply
The power button needs to be turned on to activate all the functions of the hand control. Activating the hand control starts a 20 minute timer. To restart the timer after it shuts off, press the PWR button again. Lights will dim to conserve energy after about 10 seconds of non use.

PWR Button Operation:
Green = Power on
Blue = Power off

Power Lock Out
To lock the hand control, press and hold PWR button for 4 seconds. The button will glow red. To unlock the hand control, press and hold PWR button for 4 seconds. The button will glow blue. After unlocking the hand control, you will need to press the PWR button to turn on the power to the hand control.

MSG Button Operation:
Press to turn on the vibrators.
Press again to turn off the vibrators.

HEAT Button Operation:
Press to turn on the heating pad.
Press again to turn off the heating pad.

Arrow Key Operation:
Arrow Up (S1) = Recline Position
Arrow Down (S2) = Seated Position

Timer Functions: There are two separate timer functions, One for Heat, and the other for Massage functions.
Heat Timer – Heat timer is activated when the heat button is depressed. Timer is factory set for 20 minutes.
Massage Timer- Massage timer is activated when the PWR button is depressed. Timer is factory set for 20 minutes.

Hand Controls - Lift & Recline and Heat & Massage

P/N: HV4101-HC (Cut-in: August 8, 2012 s/n PR or PL 1207F2S12160) GHV system

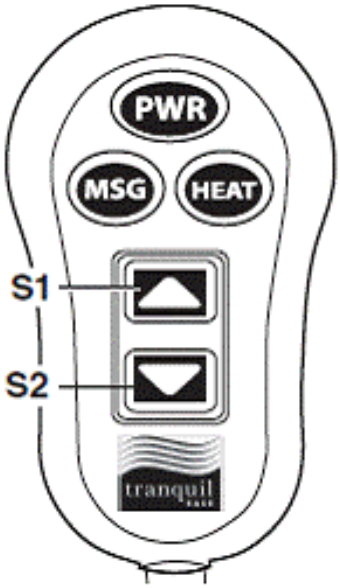

Models: PL340, PR480, PR522, PR524

To Operate Lift
Press Up key to raise chair. Press DOWN key to lower chair.

To Lock/Lift
Press and hold LOCK/UNLOCK key for approximately 3 seconds until red lock icon is lit.

To Unlock Lift
Press and hold LOCK/UNLOCK key for approximately 5 seconds until green unlock icon is lit.

To Operate Heat
Press HEAT key to turn on. Press HEAT key again to turn off.

To Operate Massage
Press MASSAGE key to turn on massage. Press again to change from WAVE/STEADY/PULSE modes (colored LEDs indicate selection).

To Turn Massage Off
Press and hold MASSAGE key.

Massage Intensity
Press INTENSITY key to choose from LO/MED/HI (colored LEDs indicate selection).

NOTE: The heat and massage is controlled by a 20 minute timer.

***P/N**: HV4101-HC-NQR **P/N**: HV4101-HC (Cut-in: August 8, 2012 s/n PR or PL 1207F2S12160) GHV system

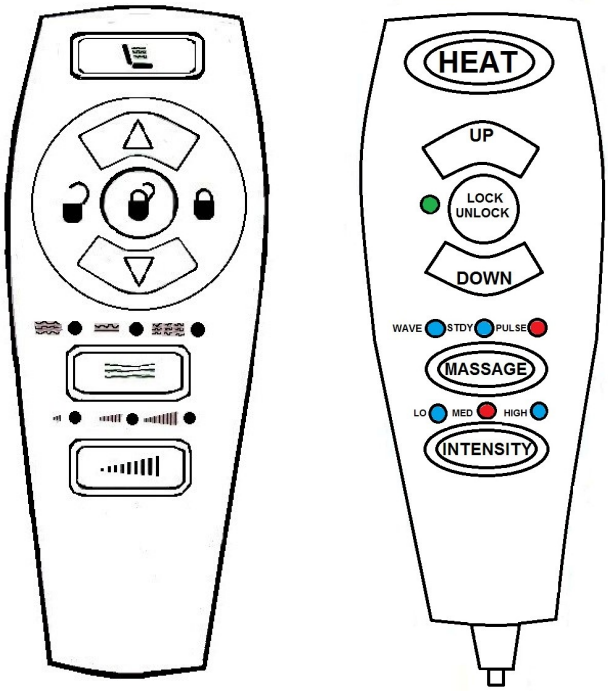

Models: PR480, PL340

To Operate Lift
Press Up key to raise chair. Press DOWN key to lower chair.
To Lock/Lift
Press and hold LOCK/UNLOCK key for approximately 3 seconds until red lock icon is lit.
To Unlock Lift
Press and hold LOCK/UNLOCK key for approximately 5 seconds until green unlock icon is lit.
To Operate Heat
Press HEAT key to turn on. Press HEAT key again to turn off.
To Operate Massage
Press MASSAGE key to turn on massage. Press again to change from WAVE/STEADY/PULSE modes (colored LEDs indicate selection).
To Turn Massage Off
Press and hold MASSAGE key.
Massage Intensity
Press INTENSITY key to choose from LO/MED/HI (colored LEDs indicate selection).
NOTE: The heat and massage is controlled by a 20 minute timer.

**** Hand Control models currently being used.***

AutoFlex Hand Control

Models: PR510-MLA, PR120

Automatic Cycling
The lumbar can cycle one of three programs by simply pressing the Autostart button 1, 2, or 3 times. See instruction for each below.
Note: The automatic feature will cycle for approximately 12 minutes then timeout. To restart, press the Autostart button 1, 2, or 3 times again.

Autostop
Pressing this key will stop the lumbar system from cycling and return it to the relaxed position.

Autostart
Pressing this key will start the automatic cycling of the lumbar system.

- **Press the Autostart key 1 time:**
  Full extension 100%
  (No Pause, fully retracts 100%, then no pause)
- **Press the Autostart key 2 times:**
  Extension 100%
  (Pauses 5 seconds, fully retracts, then pauses 3 seconds)
- **Press the Autostart key 3 times:**
  Full extension 100%
  (Pauses 8 seconds, fully retracts, then pauses 4 seconds)

Manual Operation
The lumbar system can be manually adjusted to your desired position by pressing the two buttons shown below.

Press and hold this key down to manually reduce the lumbar pressure.

Press and hold this key down to manual increase the lumbar pressure.

AutoFlex Parts

PART NUMBER	DESCRIPTION
GM1501-APUS-36	Transformer Plug 1501-A Standard USA 36 inches
GMLMBAF-CB	Control Box Lumbar Auto Flex System
GMLMBAF-CB-EXT	Control Box Extension Lumbar Auto Flex
GMLMBAF-TRAN	Transformer Lumbar Auto Flex System
MECH-LMBAF-MED	Mech Lumbar Auto Flex System Med
ZKLMB-AF	Hand Wand Lumbar Auto Flex

Shiatsu Hand Control

Model: PR724

Shiatsu Operation

1. Press the **ON/OFF** button to startup the massage. The rolling indicator will be on, signaling the direction the unit is operating. Default timer is 15 minutes.
2. Press the **TIMER** button to manually switch from 5 to 30 minutes of operation. Each time the button is pressed, the timer will increase in 5 minute intervals. If the timer is not pressed, the default time is 15 minutes.
3. Press the **ROLLING** button to start or stop the stretching action. This is a *kneading motion up and down the whole back*. Pressing the button a second time will stop the motion.
4. Press the **TARGET** button to initiate a focused, kneading motion *on a desired position of the back*. Pressing the button a second time will stop the motion.

How to troubleshoot a problem

Device does not work.
1. Connect hand wand, and operate as per the instructions.
2. Check the transformer connections to the chair and the wall outlet.
3. Input: 100-240V Output: 29V/2A
4. Replace control box. *Note: Must be the same version control box.*

Device suddenly stops or runs in the wrong order.
1. Restart the hand wand.
2. Power off and disconnect the power supply, reconnect and power on after 20 minutes.
3. Check all related connectors and reconnect if necessary.

Shiatsu Parts

PART NUMBER	DESCRIPTION
GMMSGSH-CB	Control box Shiatsu Massage System
GMMSGSH-CB-EXT	Control Box Extension Shiatsu Massage System Y Connector
ZKMSG-SH	Hand Wand Shiatsu
ZKMSG-SH-EXT	Extension Cord for ZKMSG-SH
MECH-MSGSH-MED	Mech Shiatsu Massage System Med

AutoFlex Wiring Diagram

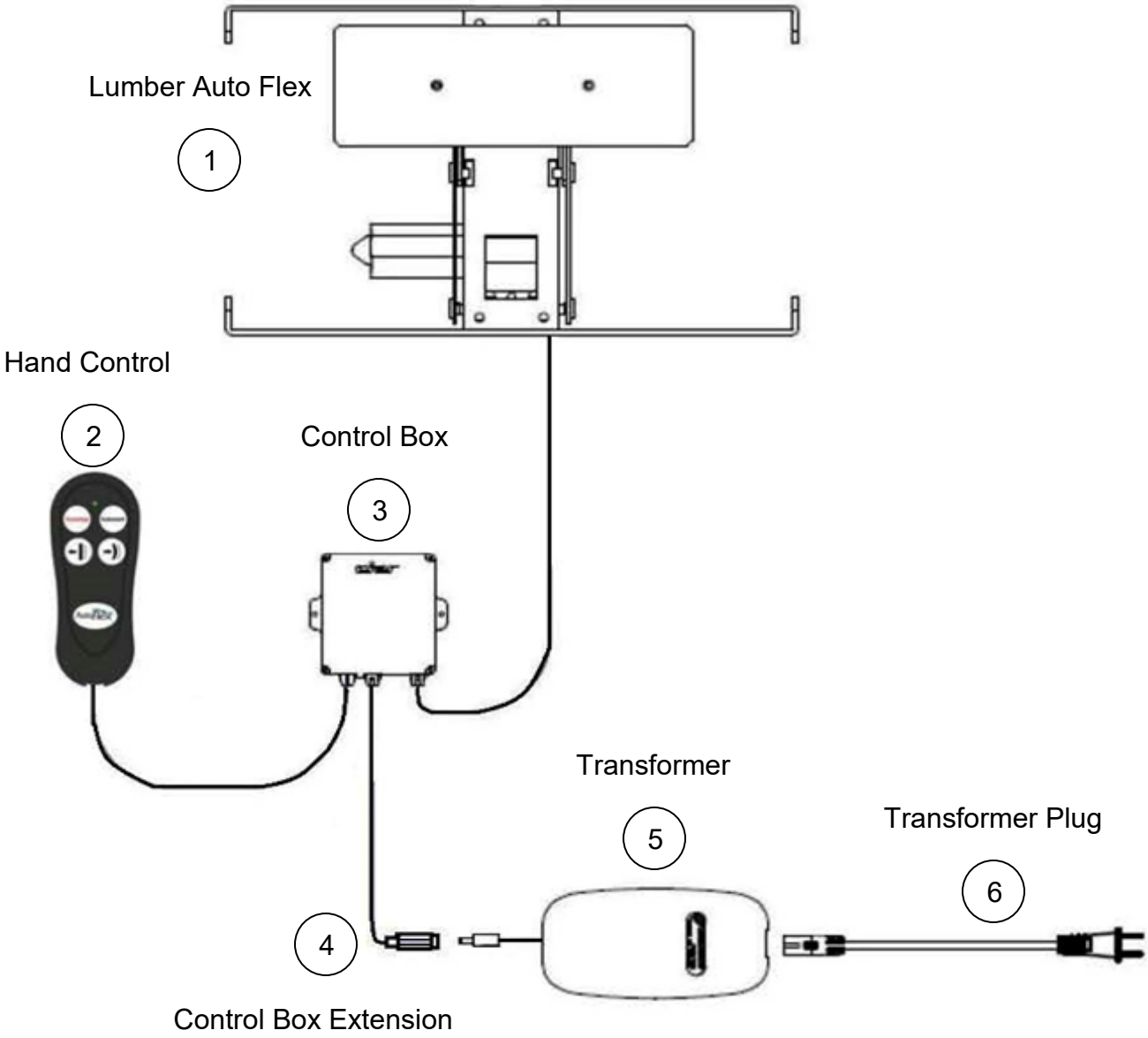

DWG #	PART NUMBER	DESCRIPTION
1	MECH-LMBAF-MED	Mech Lumbar Auto Flex System Med
2	ZKLMB-AF	Hand Wand Lumbar Auto Flex
3	GMLMBAF-CB	Control Box Lumbar Auto Flex System
4	GMLMBAF-CB-EXT	Control Box Extension Lumbar Auto Flex
5	GMLMBAF-TRAN	Transformer Lumbar Auto Flex System
6	GM1501-APUS-36	Transformer Plug 1501-A Standard USA 36 inches

Shiatsu Component Replacement

Tools Required: Phillips screwdriver, 3/8” wrench, 7/16” wrench, wire cutter, and staple puller.

Refer to figure 1 and follow the step-by-step instructions below for Shiatsu massage unit replacement.

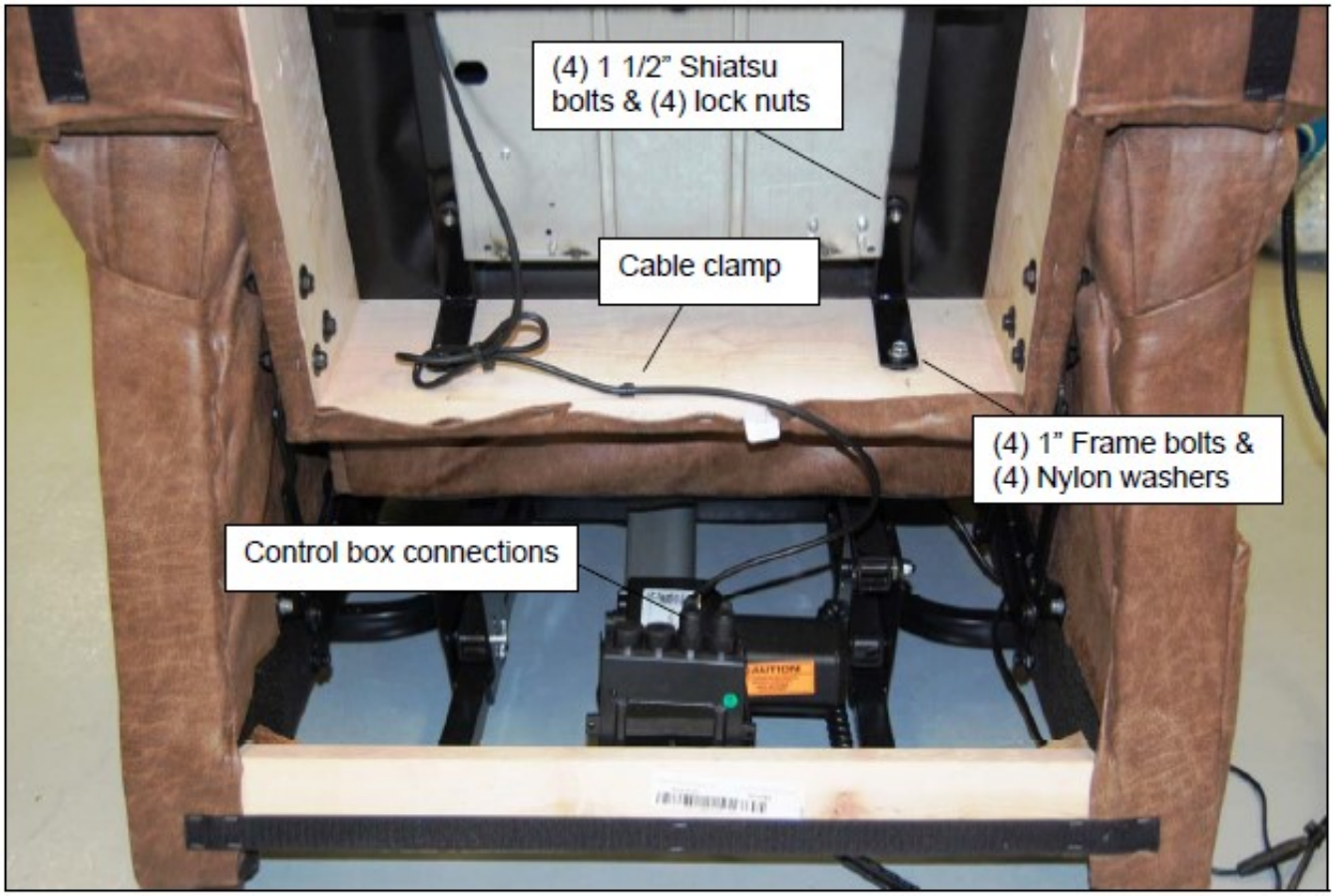

<u>Shiatsu massage unit removal / installation</u>

Step 1 – Remove the power source by unplugging the chair from the AC wall outlet.

Step 2 – Remove the removable back fabric to expose the Shiatsu unit.

Step 3 – Remove the cable clamp from the wooden frame.

Step 4 – Unplug the Shiatsu unit from the control box.

Step 5 – Remove the (4) 1/4 – 1 whiz lock bolts and (4) 3/16 black nylon washers securing the Shiatsu metal frame to the wooden frame.

Step 6 – Remove the (4) 1/4 – 20 x 1 1/2 whiz lock bolts and (4) 1/4 – 20 flange lock nuts securing the Shiatsu unit to the metal frame.

Step 7 – Install the new massage unit by reversing removal process. When installing new unit, cable must be on the left side for proper placement.

Refer to figure 2 and follow the step-by-step instructions below for control box or extension wire replacement.

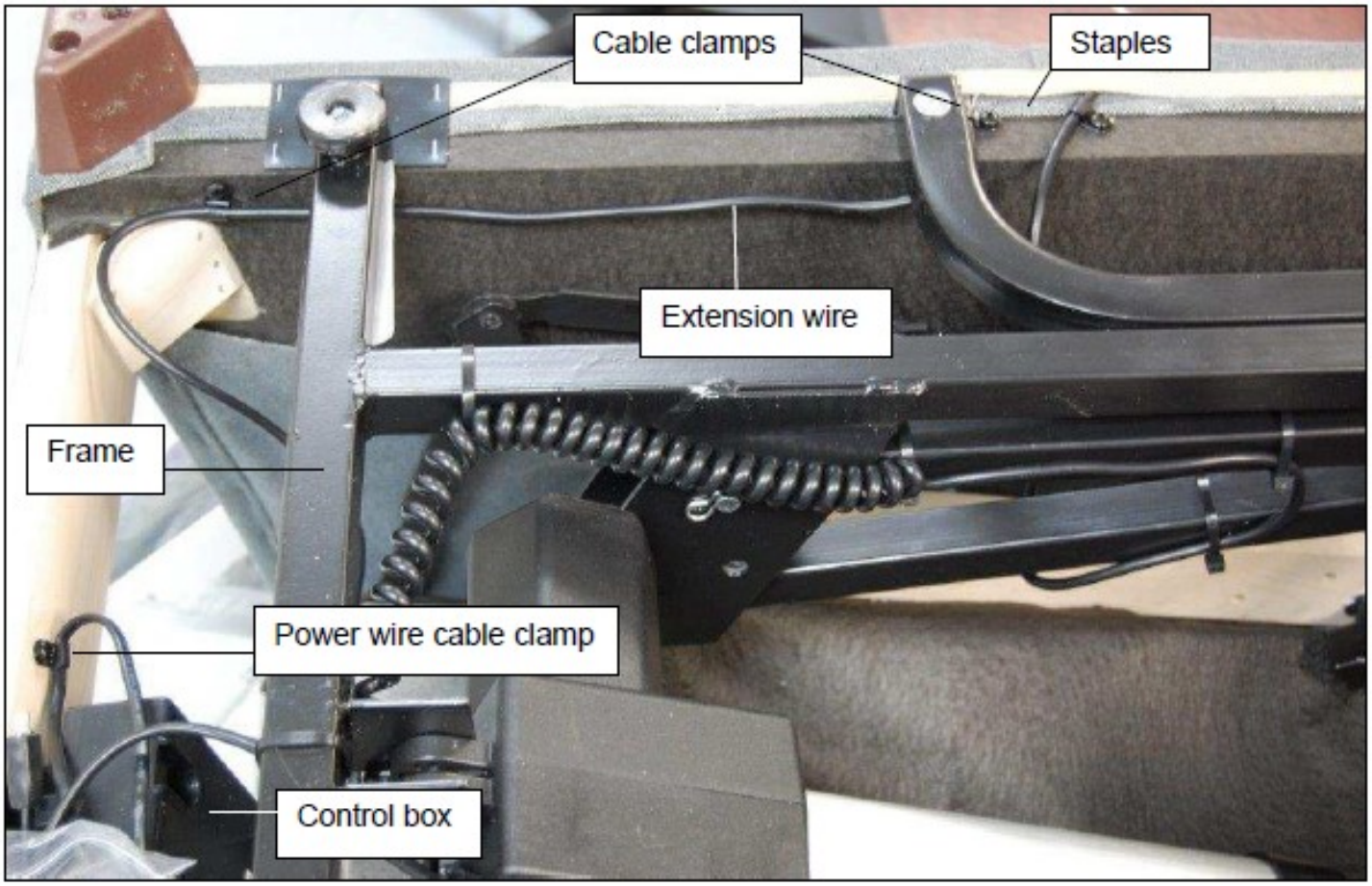

Figure 2

<u>Control box removal / installation</u>

Step 1 – With the chair upside down, run the chair hand control to raise the frame enough to access the control box.
Step 2 – Remove the power source by unplugging the chair from the AC wall outlet.
Step 3 – Unplug the (2) control box connections.
Step 4 – Remove the cable clamp securing the control box power wire to the wooden frame.
Step 5 – Remove the control box by sliding it off the bracket which secures it to the wooden frame.
Step 6 – Unplug the control box power wire from the transformer wire.
Step 7 – Install the new control box by reversing removal process.

<u>Extension wire removal / installation</u>

Step 1 – Remove the power source by unplugging the chair from the AC wall outlet.
Step 2 – Disconnect the Shiatsu hand control from the extension wire inside the pocket.
Step 3 – With the chair upside down, remove staples to allow the extension wire to be pulled through the fabric.
Step 4 – Remove the (2) cable clamps securing the extension wire to the wooden frame.
Step 5 – Unplug the extension wire from the control box to remove it.
Step 6 – Install the new extension wire by reversing removal process.

Shiatsu Wiring Diagram

PART NUMBERS:

1. ZKMSG-SH
2. ZKMSG-SH-EXT
3. GMMSGSH-CB
4. MECH-MSG SH-MED
5. GMMSGSH-CB-EXT
6. GM2000-TR
7. GM1501-APUS-36
8. GM1500-LM

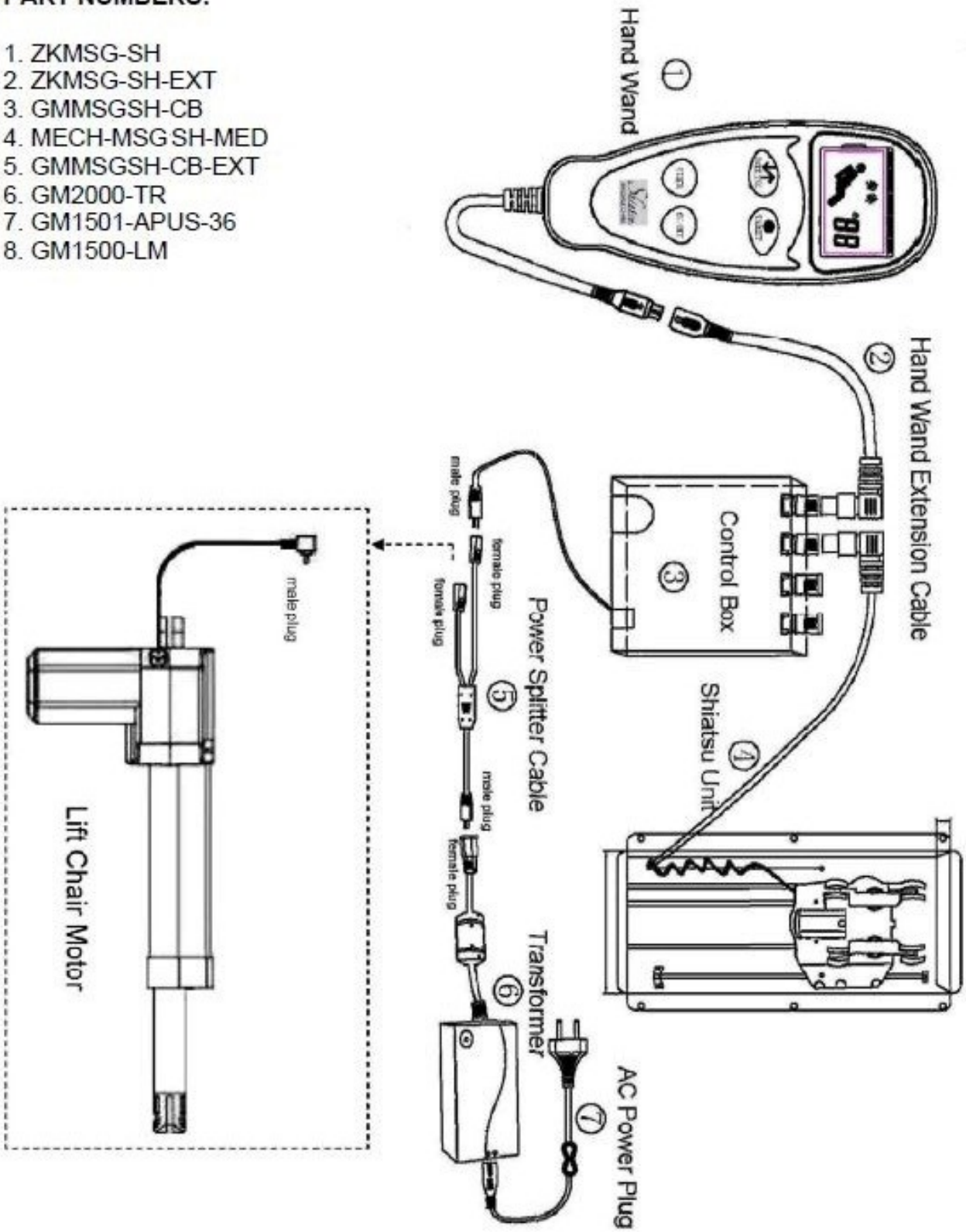

PR404 Hand Control & Wiring

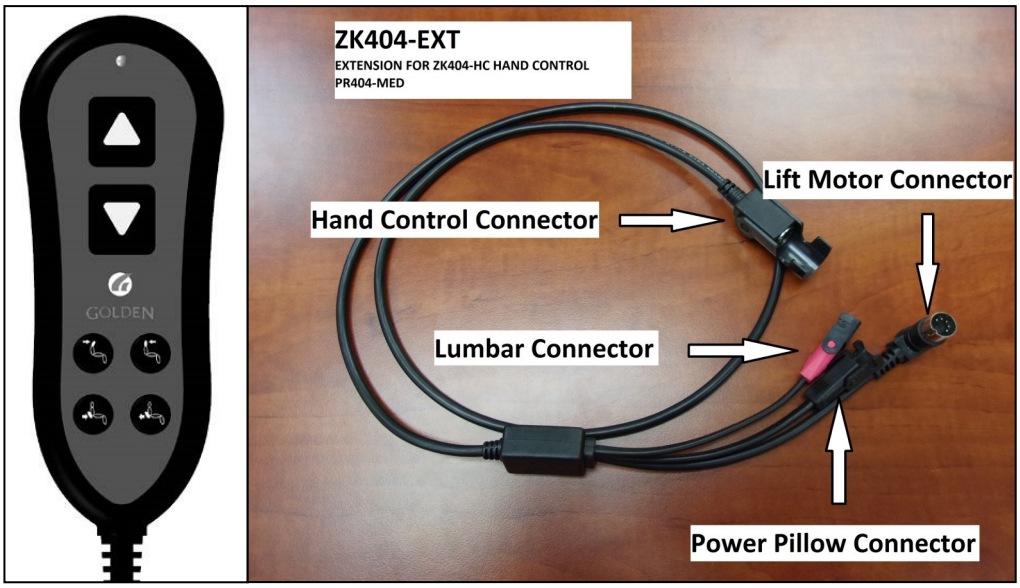

P/N: ZK404-HC

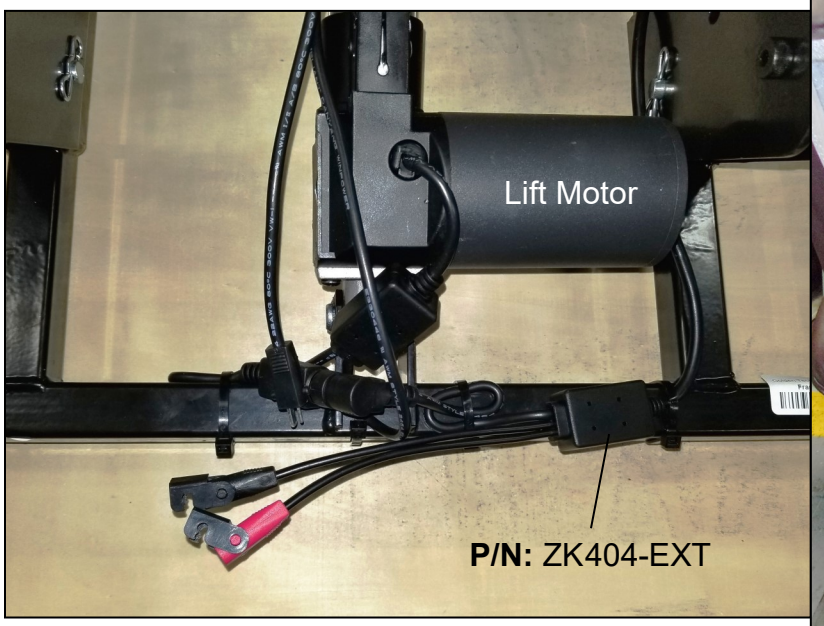

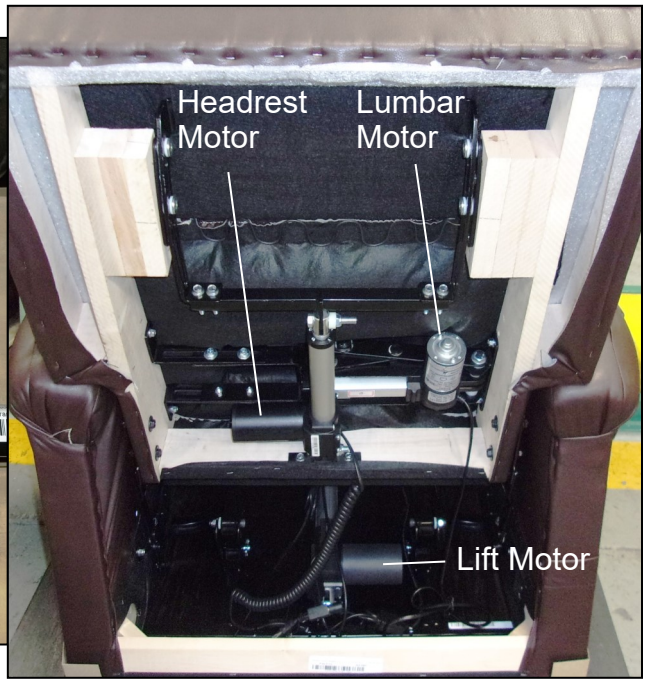

Item No	Description	Qty.
GM1410-LM	Chair Lift Motor 1410	1
LM5100	LM5100 Lift Frame	1
ZK404-EXT	Extension for ZK404-HC	1
GM1410-TR	Chair Transformer 1410	1
GM1501-APUS-36	Transformer Plug 1501-A Standard USA 36 inches	1
ZK404-HC	Hand Wand Two Button with Lumbar and Headrest	1
GM0910	Motor Headrest	1
MECH-LMBPP	Mech Lumbar PP System 404 Series	1

Foot Rest Extension Installation

Models: PR401SME, PR401MLA, PR474, PR722, PR756MC, PR756L, PR508M, PR505S, PR505M, PR505L, PR501S, PR501M, PR501L, PR501T, PR501S-23, PR501M-26D, PR501L-26D, PR501T-28D, PR505-M26, PR505T

Kit Includes: Quantity (1) extension board, (2) brackets, (4) 1/4-20 x 1" bolts, (4) 1/4-20 x 1 1/2" bolts, (2) large black front stoppers, (4) small black spacers, (6) lock nuts, (2) wood screws

Tools Required: Phillips screwdriver, 3/8 socket, and 7/16 wrench

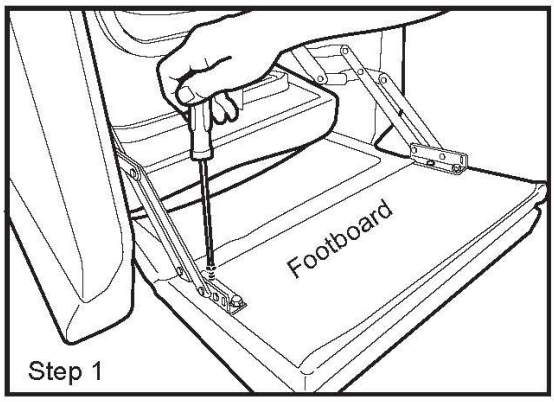

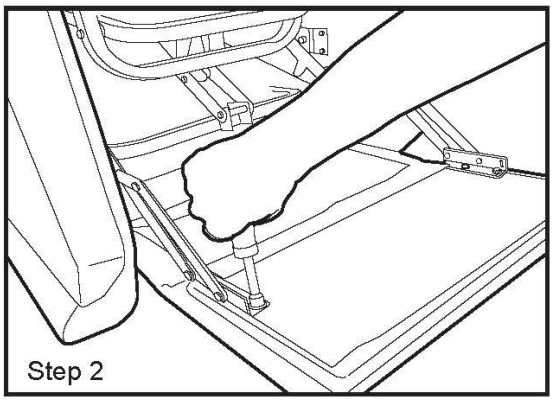

Step 1 – Place chair upside down, open footboard, remove Phillips head screw from one side of the footboard and retain the screw.

Step 2 – Remove hex head bolt from the same side of the footboard and retain the bolt. Repeat steps 1 and 2 for the opposite side.

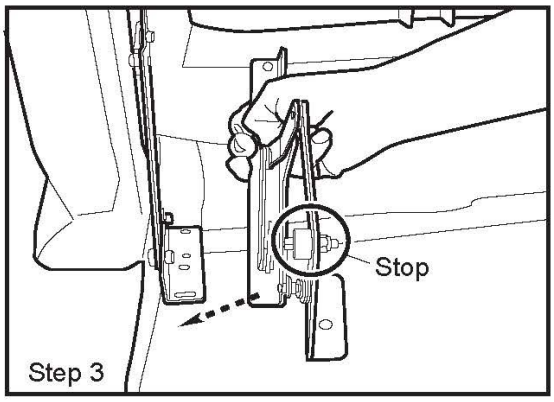

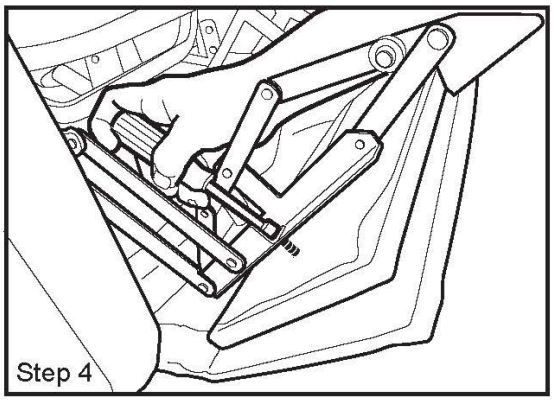

Step 3 – Remove (1) bracket, 1" bolt, large stopper, and lock nut from the kit and install as a stop as shown. Position the bracket between the footboard and scissor mechanism.

Step 4 – Install (1) bolt removed in step 2 through the bracket, scissor mechanism, and into the footboard as shown.

Step 5 – Install (1) Phillips head screw removed in step 1 through the end hole of the bracket, scissor mechanism, and into the footboard as shown. Repeat steps 3 – 5 for the opposite side of the footboard.

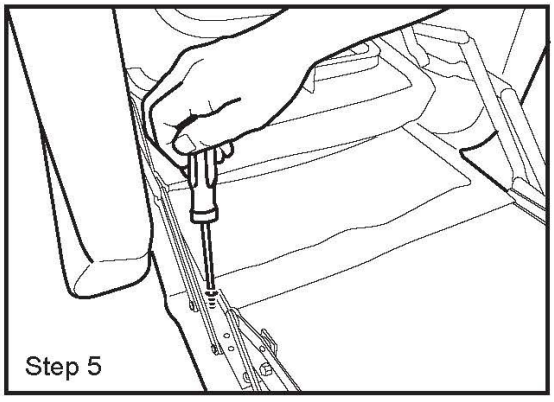

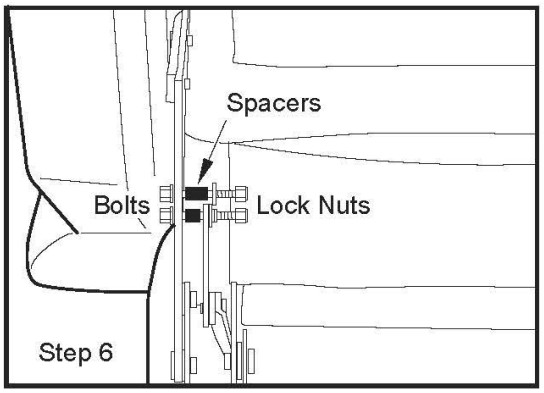

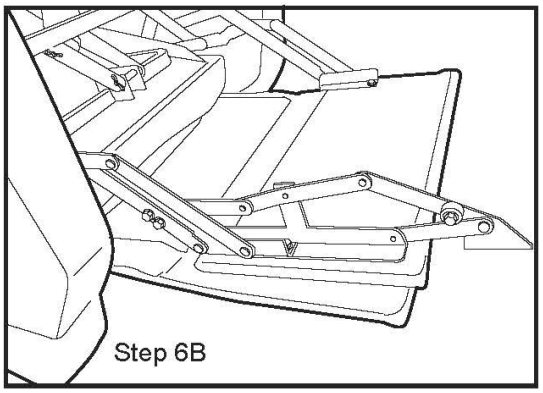

Step 6 – Remove (2) 1 1/2" bolts, small spacers, and lock nuts from the kit. Insert each bolt through the scissor mechanism. Place a spacer on each bolt, align the holes in the bracket and insert the bolts. Place a lock nut on each bolt and tighten to secure. See figure 6B for completed assembly. Repeat for opposite side.

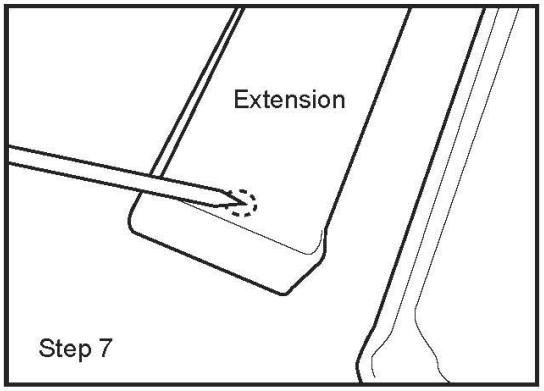

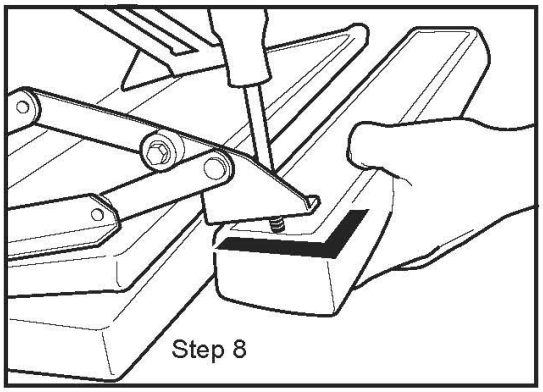

Step 7 – Locate t-nut under typar on one side of the extension board and poke a hole through the typar. Repeat for opposite side. Ensure nap direction on cloth fabrics by rubbing across the fabric on both pieces.

Step 8 – Remove (2) 1" bolts from the kit. Insert one bolt through the bracket and into the extension board. Align extension board and bracket square and tighten to secure. Repeat for opposite side.

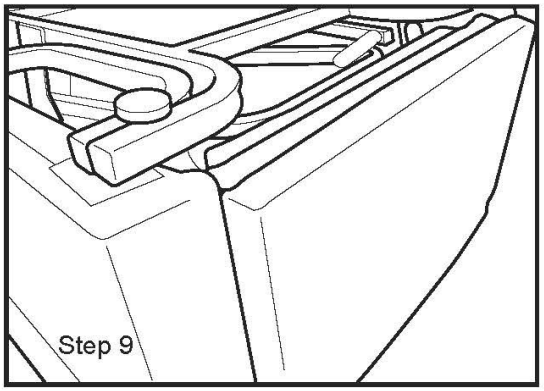

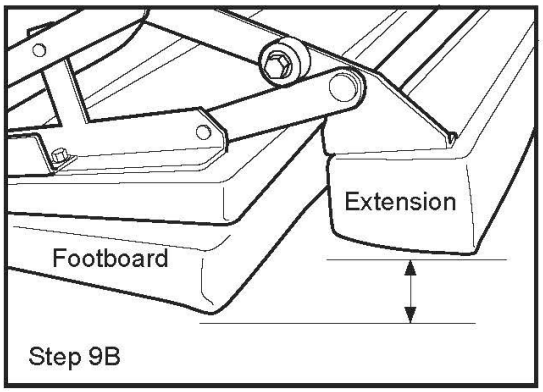

Step 9 – Close and open the footboard to check for proper function. When open, the footboard and extension board are not level. The extension sits slightly lower when installed properly.
See figure 9B.

Grease Points

WARNING **Appling any type of lubricant as a routine maintenance procedure is not necessary. If lubricating the lift chair to alleviate excessive noise, only apply the specified lubricant at the locations shown below. Do not apply excessive lubricant. Excessive lubricant could leak onto the chair or the floor causing damage.**

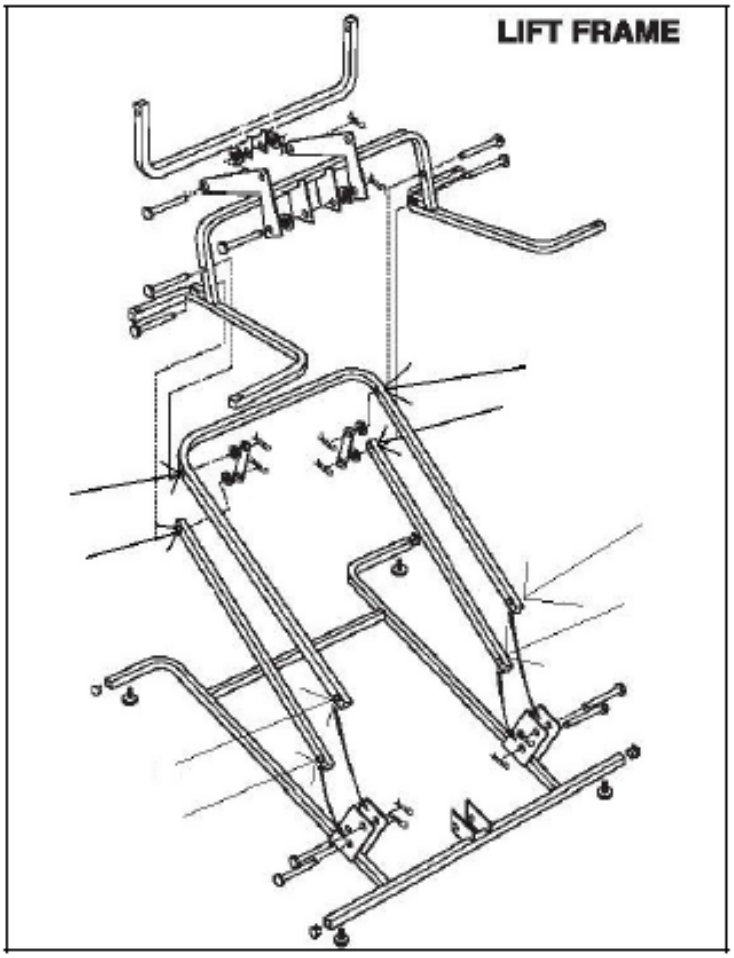

USE WHITE LITHIUM GREASE

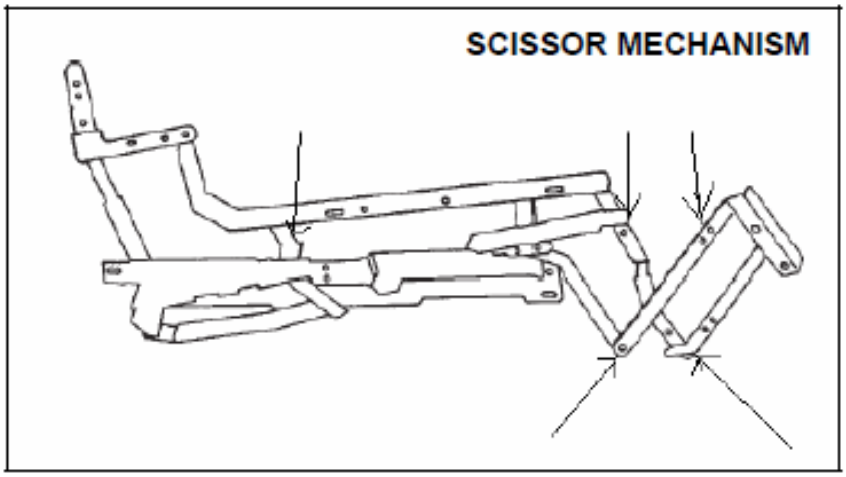

USE ZEP2000

Procedure for Lubricating Recline Bars

In this photo the chair is upside down and the footrest is open.

Recline bar is located under the seat. It is a wide "U" shaped bar that is rotating on recline bar bolts. It is also attached to straps that are also attached to the motor.

To confirm the noise is coming from the recline bar you can unhook the recline bar from the motor straps by removing the hairpin and pulling out the clevis pin and rotating the recline bar back and forth listening for the noise.

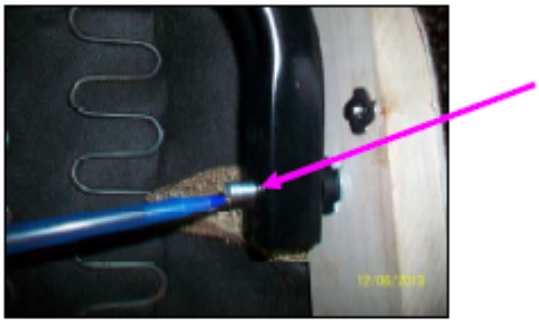

The recline bar bolt is screwed in from the outside of the wooden seat frame through a t-nut. It then goes through the metal square tubing in a bushing.

The bushing (cylinder the recline bar bolt travels through in the square metal tubing) is lubricated with a heavy duty synthetic grease at the factory before the recline bar is installed.

We recommend Super Lube, which works best if you can get it inside the bushing of the square tubing.
It is recommended that grease be used rather than a liquid spray or oil.

There are some aerosol greases available to purchase at the hardware store.

We use CRC 3-36 to lubricate hard to reach areas but it isn't as effective as grease because it doesn't last as long.

Lift Chair Cut Away

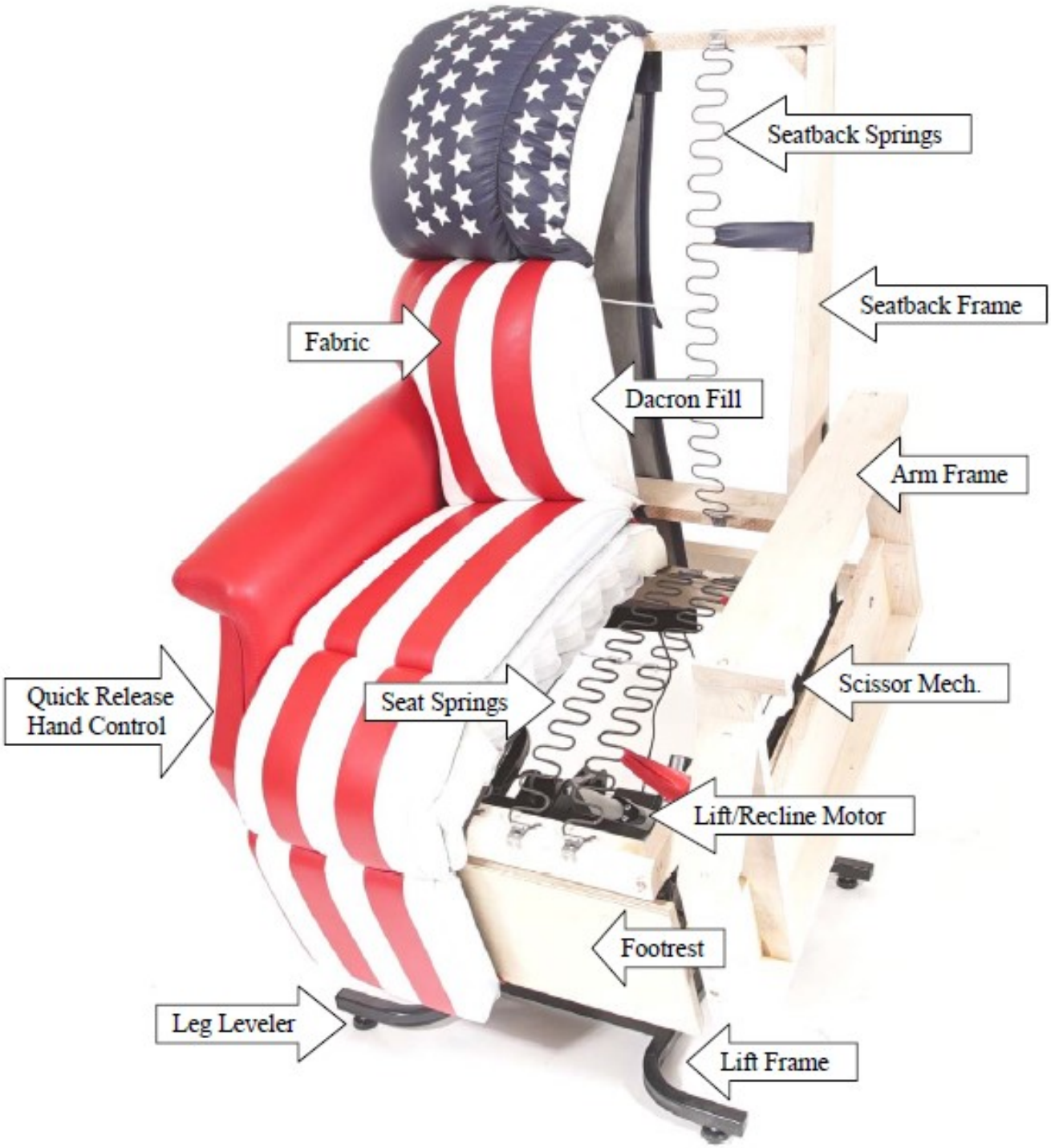

Note: The above illustration is intended as general information. It does not represent all models in this manual.

Assembled Lift Chair Boxing Instructions

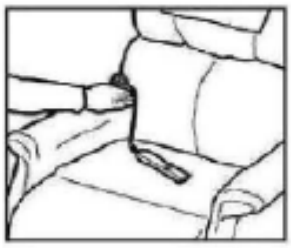

Tuck cord from hand control between arm & back of chair.

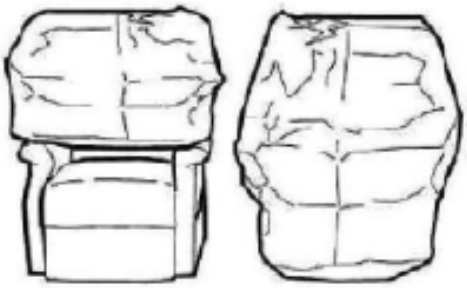

Place bag over chair.

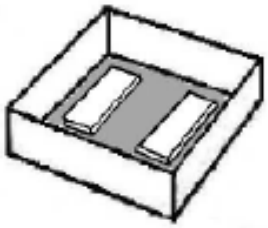

Place bottom tray on floor with foam in opening facing up.

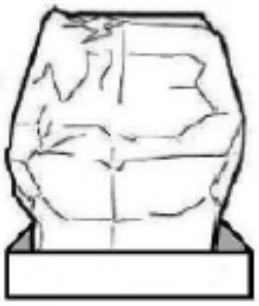

Place chair into bottom tray.

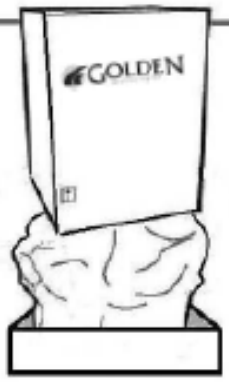

With the Golden Technologies name in the upright position, place the sleeve over the chair and into the bottom tray.

Note: Use approved 3" packaging tape.

Note: Use approved 3" packaging tape.

Place top tray onto the sleeve with opening facing down, then tape along each edge, 360 degrees around the top and bottom trays as shown.

Note: Banding can be used in place of tape if available.
Place bands vertically around top and bottom trays and secure only after all packaging steps are complete.

Lift Chair Boxing Instructions with Back Off

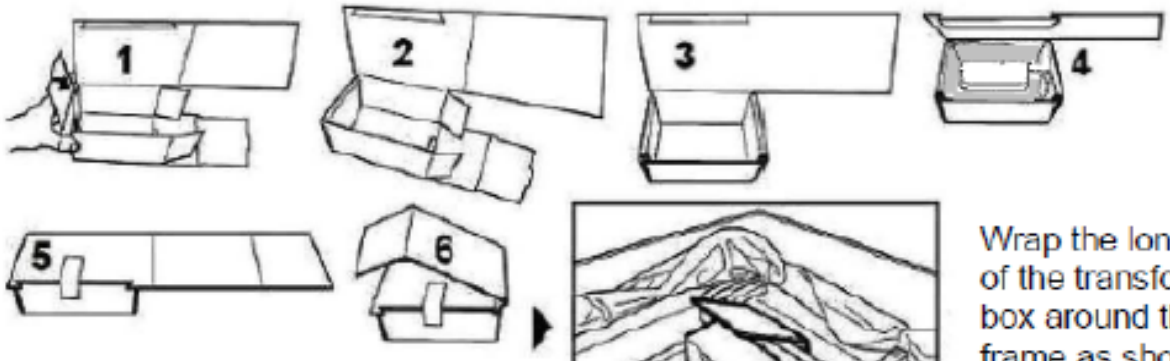

Construct the box for the transformer, (1, 2, 3). Place transformer in box (4) & tape it closed (5).

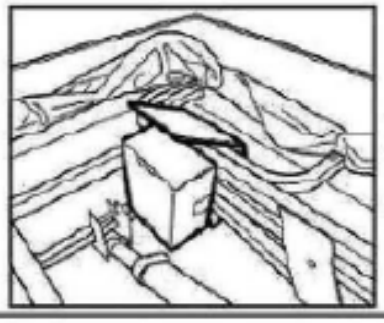

Wrap the long flap of the transformer box around the frame as shown. Then tape it so it is secure.

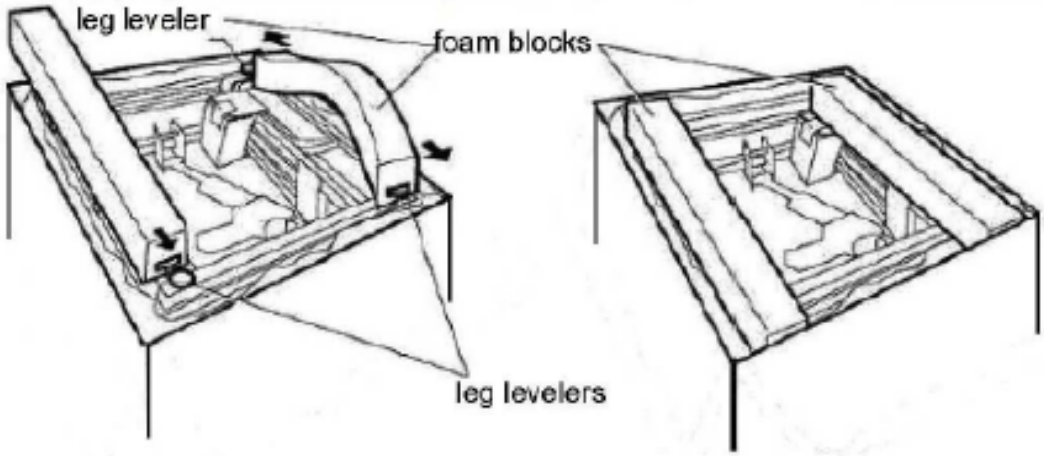

Slide the groove of the foam blocks onto the leg levelers, first onto one, then onto the opposite one, so that the foam is locked into place.

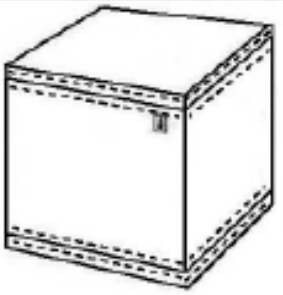

Note: Use approved 3" packaging tape.

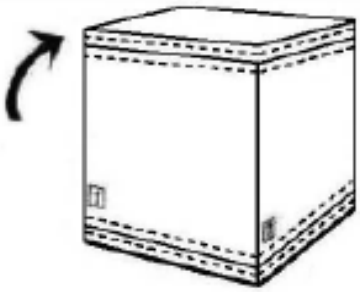

Carefully turn the box over so that it is in the upright position.

Place the bottom tray onto the sleeve with the opening facing down, then tape along each edge, 360 degrees around the top and bottom trays as shown.

Note: Banding can be used in place of tape if available.
Place bands vertically around top and bottom trays and secure.

Lift Chair
Service Guide

Golden Technologies
401 Bridge Street
Old Forge, PA 18518
www.goldentech.com

GT_SG_08.05.2021